ANDRITZ Hydro

Water. Power. HYDROMATRIX

HYDROMATRIX®

An innovative way to hydropower generation

Conventional

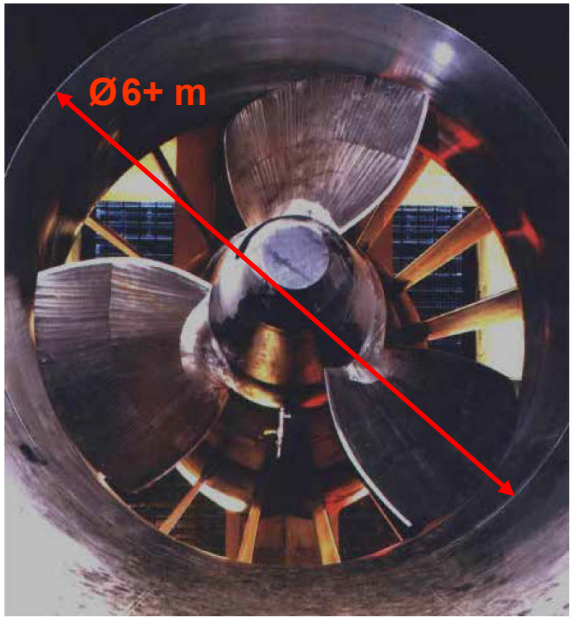

HYDROMATRIX®

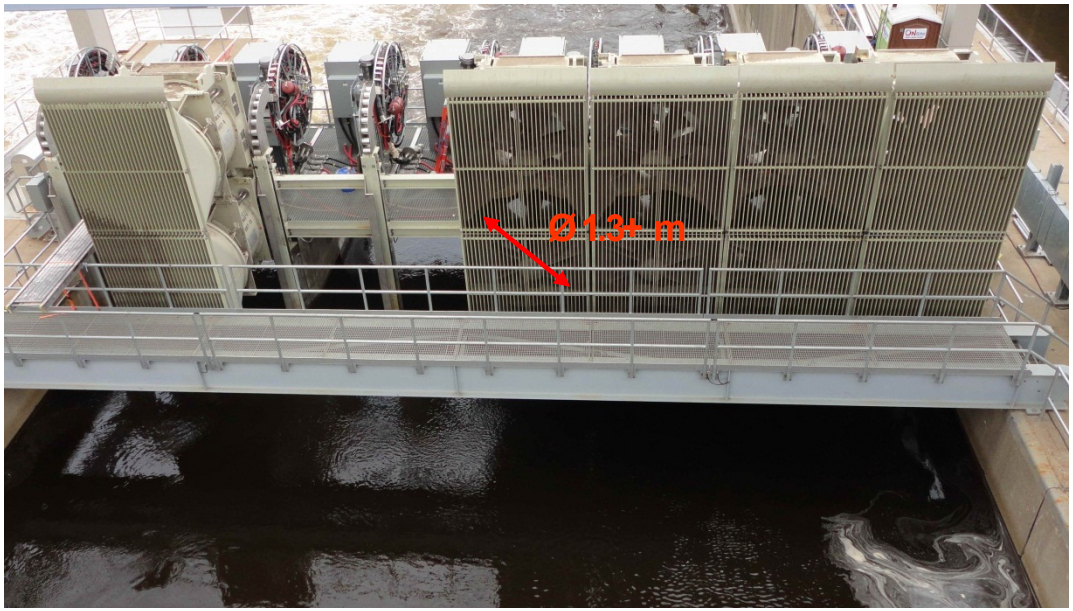

- An array („Matrix“) of small turbines instead of conventional sized turbines
- Best suited for low head sites with existing dam and weir structures
- Most economical in larger numbers -> not a typical „small hydro“ application

HYDROMATRIX®

A modular Concept in the “HYDRO-WORLD”

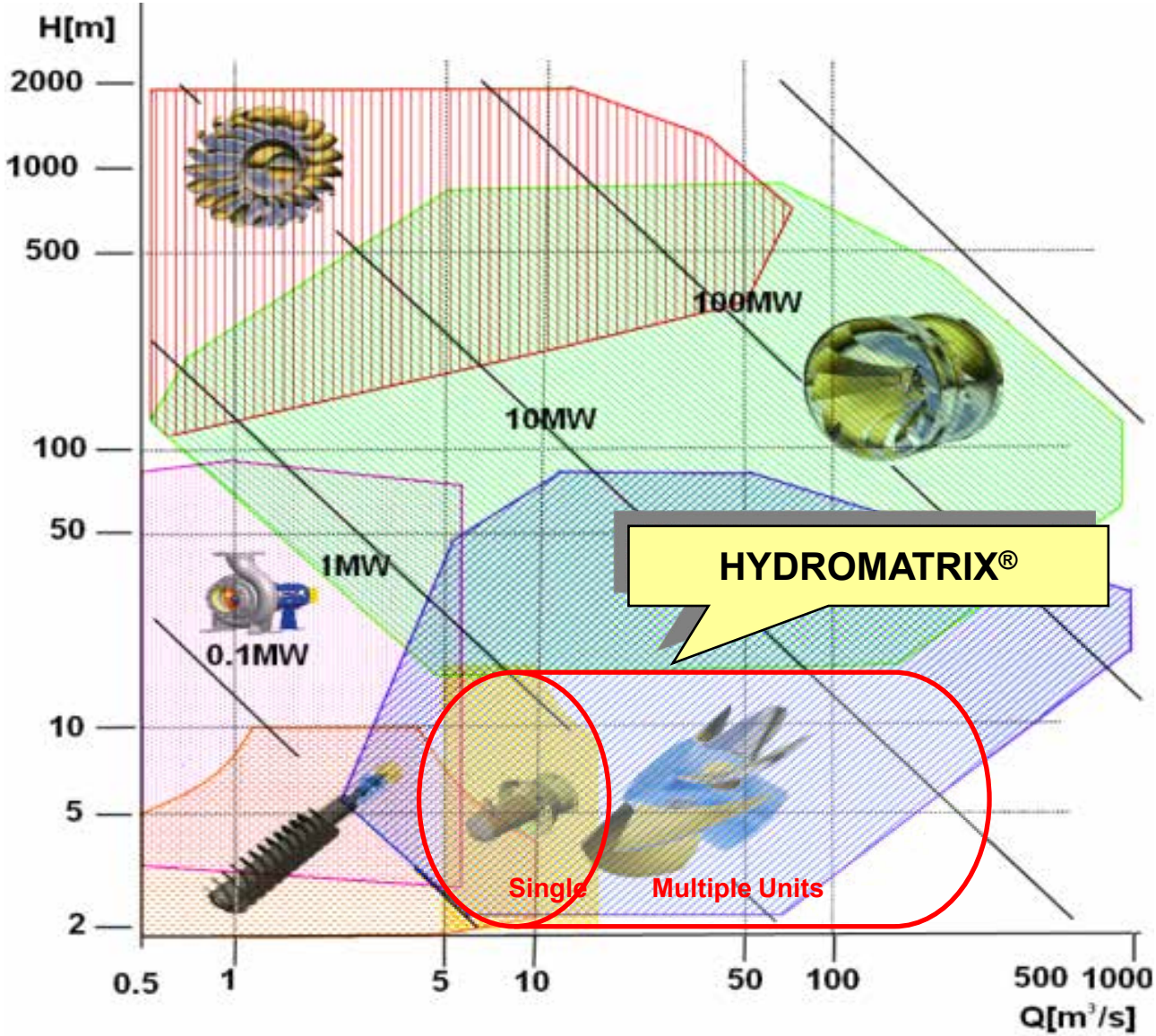

HYDROMATRIX®

Application criteria

- Available plant discharge minimum ~ 60 m³/s
- Available gross head from 2 m up to 20 m
- Minimum tailrace depth of 1.5 m -
- Minimum submergence of 0.3 - 4.0 m depending on gross head
- Unit output from 100 kW up to ~ 1500 kW
- Grid connection in close vicinity
- Structure available & suitable for HYDROMATRIX®

HYDROMATRIX®

Advantages

- **Use of existing weir structures**
  - No major civil construction –> less cost
  - Little excavation & no coffer dams –> less geological risk
  - No additional land usage -> environmentally friendly
  - Existing river flow pattern can be maintained

- **HYDROMATRIX® Modules removable at flood conditions**

- **Standardized modular concept**
  - Compressed project schedule
  - High availability & easy maintenance

HYDROMATRIX®

Application Range

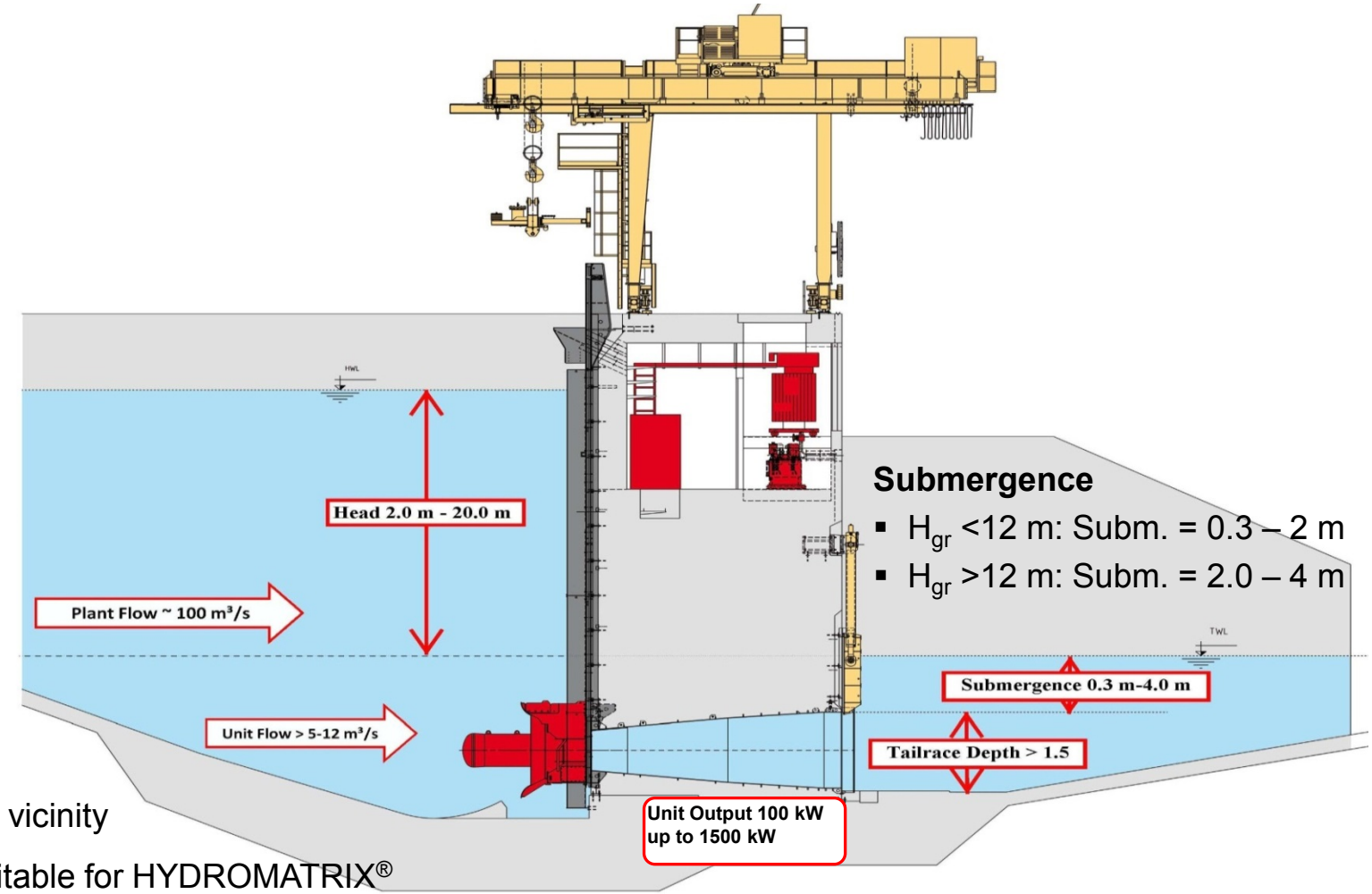

Submergence

- H_{gr} <12 m: Subm. = 0.3 – 2 m
- H_{gr} >12 m: Subm. = 2.0 – 4 m

- Grid connection in close vicinity
- Structure available & suitable for HYDROMATRIX®

ANDRITZ Hydro

HYDROMATRIX® Projects

Locations

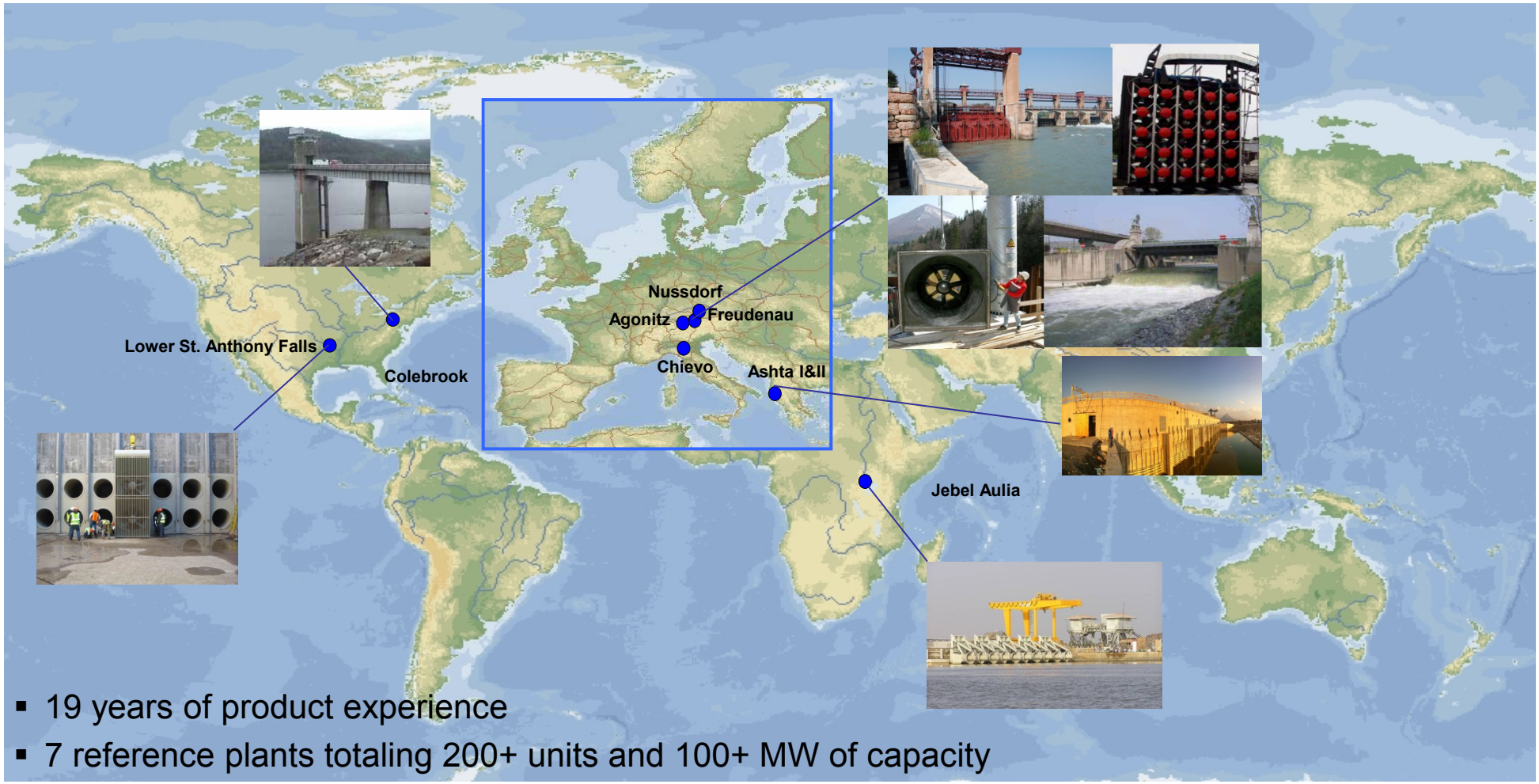

- 19 years of product experience
- 7 reference plants totaling 200+ units and 100+ MW of capacity

ANDRITZ Hydro

HYDROMATRIX®

Operating Range of a single turbine-generator unit

Output Values includes already all electrical and hydraulic losses

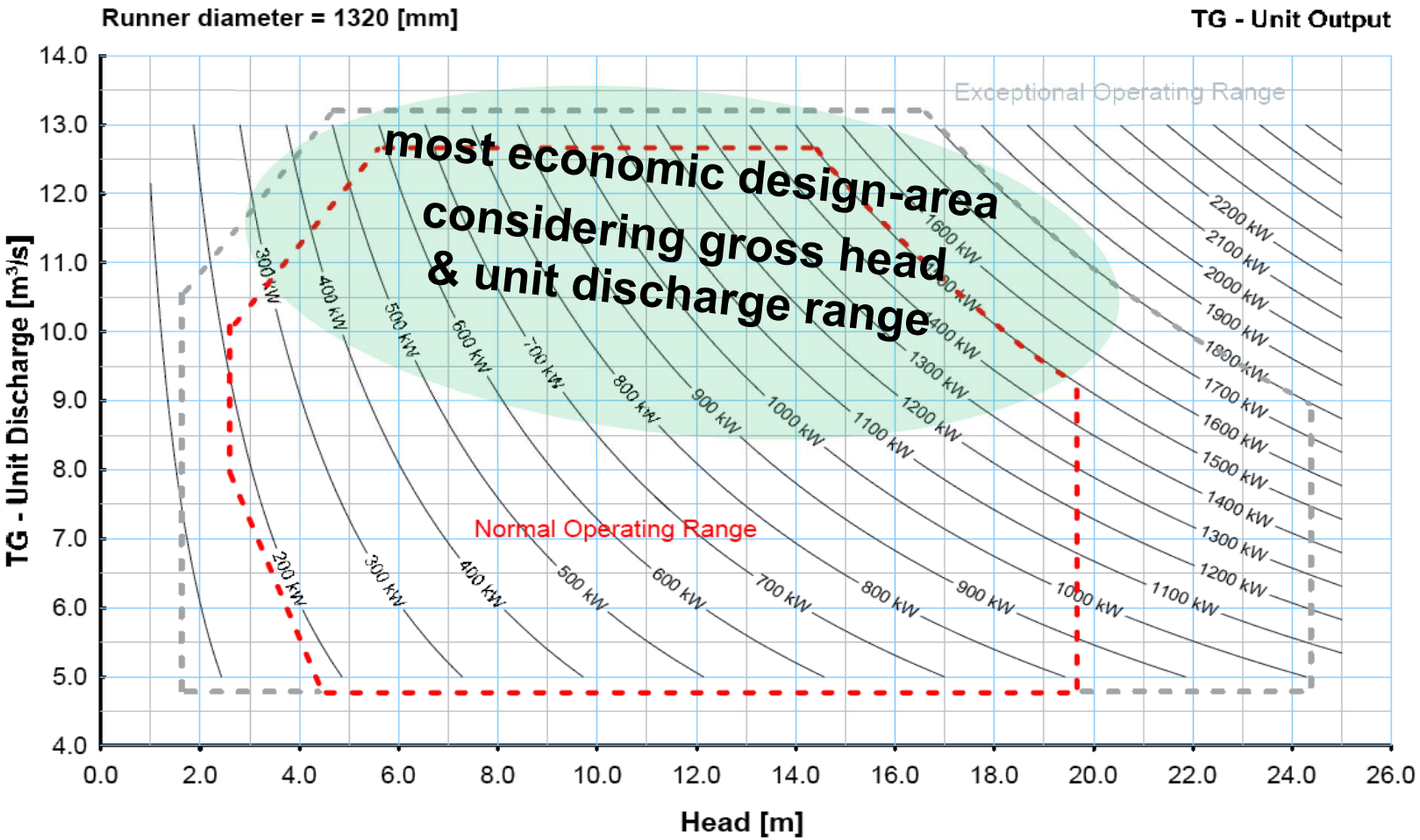

The Unit outputs indicated on the charts consider the typical hydraulic and electric plant losses (Trashrack, friction, cabling, generator, transformer, etc.). The charts are supposes to give an orientation about the actual plant output which can be expected at the point of interconnection.
For performance optimization a detailed hydraulic layout is usually performed. Please contact ANDRITZ Hydro for questions and further details.

StrafloMatrix™

Operating Range of a single turbine-generator unit

Output Values includes already all electric and hydraulic losses.

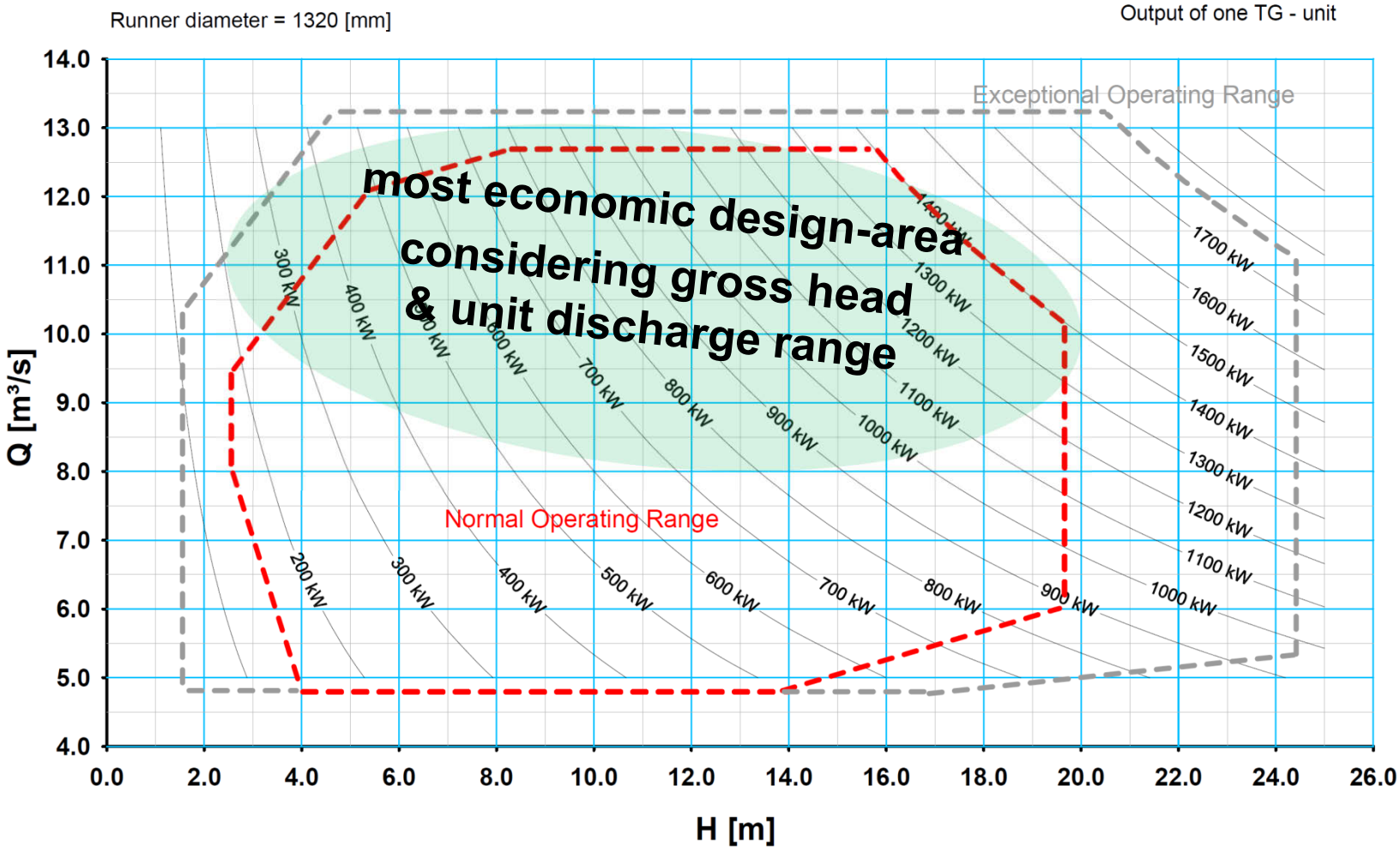

The Unit outputs indicated on the charts consider the typical hydraulic and electric plant losses (Trashrack, friction, cabling, generator, transformer, etc.). The charts are supposes to give an orientation about the actual plant output which can be expected at the point of interconnection.
For performance optimization a detailed hydraulic layout is usually performed. Please contact ANDRITZ Hydro for questions and further details.

HYDROMATRIX®

Energy Production

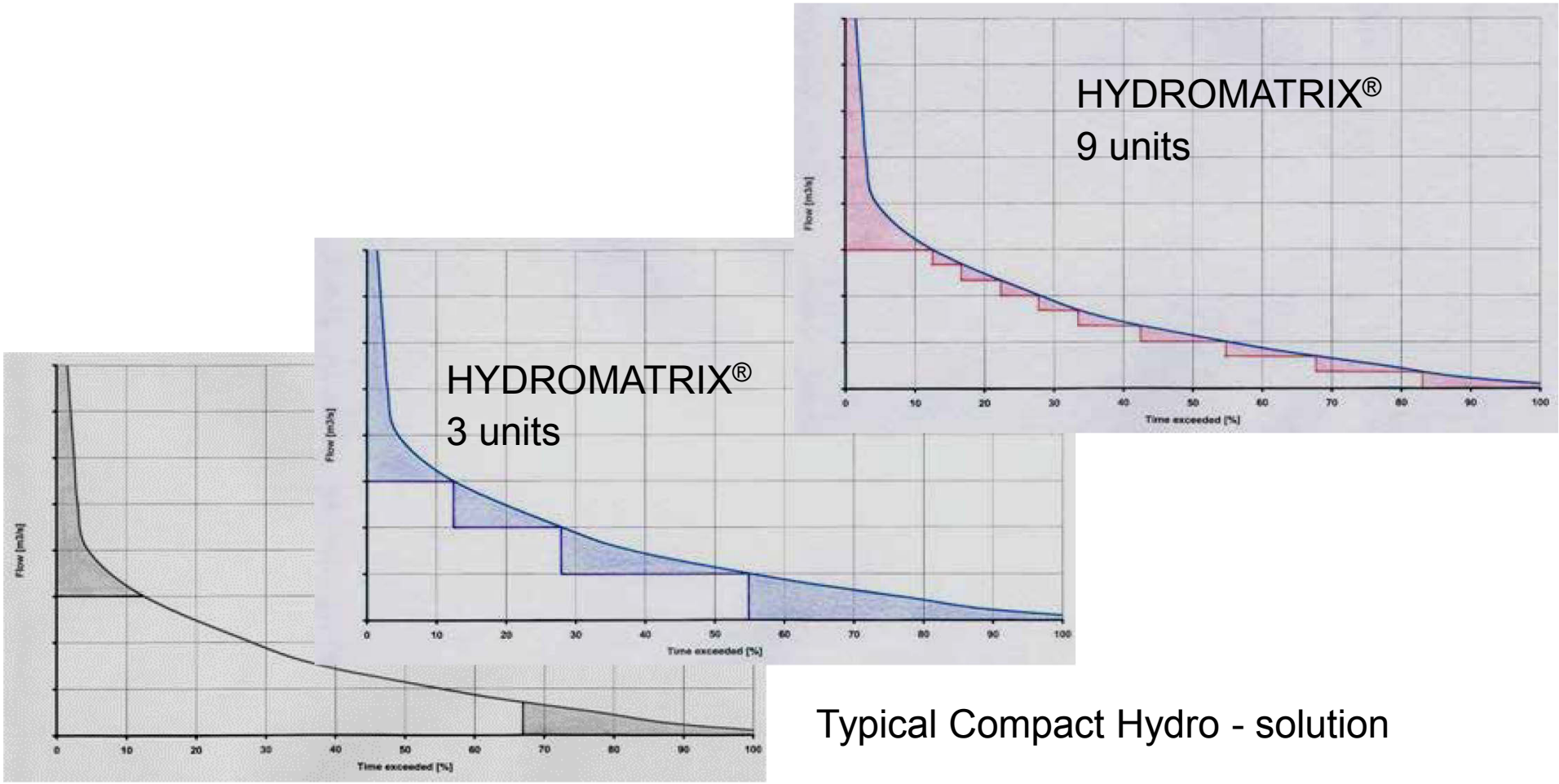

Typical Compact Hydro - solution

ANDRITZ Hydro

HYDROMATRIX®

Design Features

- Unregulated propeller turbine (aluminum bronze or stainless steel runner)
- Directly driven synchronous (Permanent Magnet Technology) or asynchronous generator
- Welded hydraulic steel structure
- Mechanical face seal
- Roller type bearings, oil sump lubrication
- Light weight (9 – 13 t) -> truckable
- Minimum maintenance
  -> annual oil change
- Flexible concept - Modular switchgear

ANDRITZ Hydro

Turbine-Generator Unit Designs

HYDROMATRIX® versus StrafloMatrix™

HYDROMATRIX®	StrafloMatrix™
▪ Simple bulb design	▪ Generator outside of flow (straight flow)
▪ Synchronous / asynchronous operation	▪ Synchronous operation only
▪ Permanent magnet or squirrel-cage rotor	▪ Combined runner / permanent magnet rotor
▪ Higher output range than StrafloMatrix™	▪ 50% shorter and 30% lighter than HM
▪ PF compensation for asynchronous	▪ No PF compensation required

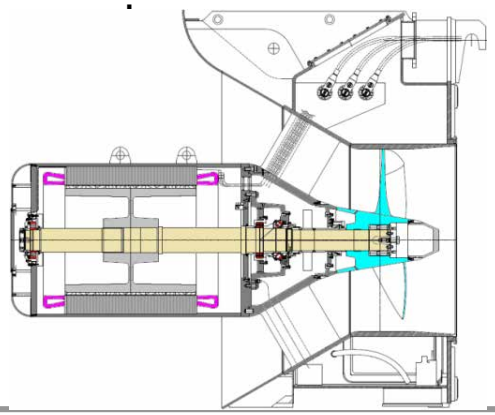

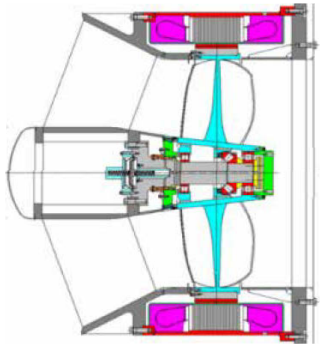

Turbine-Generator Unit Designs

HYDROMATRIX® versus StrafloMatrix™

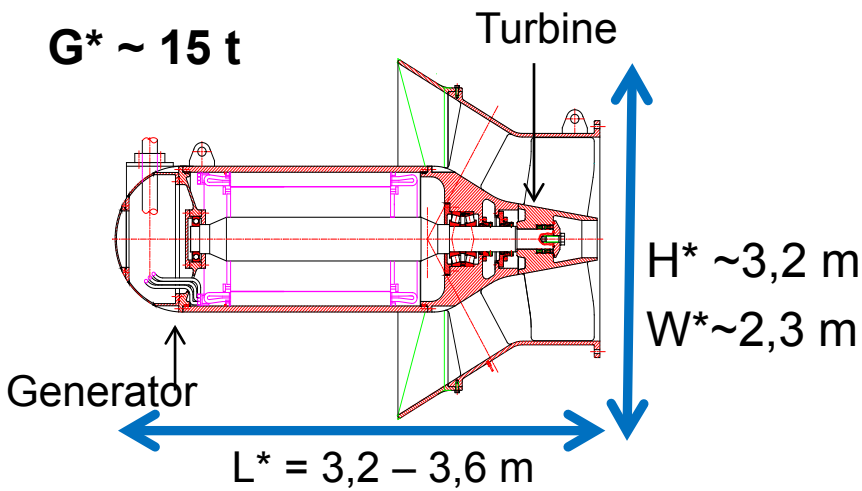

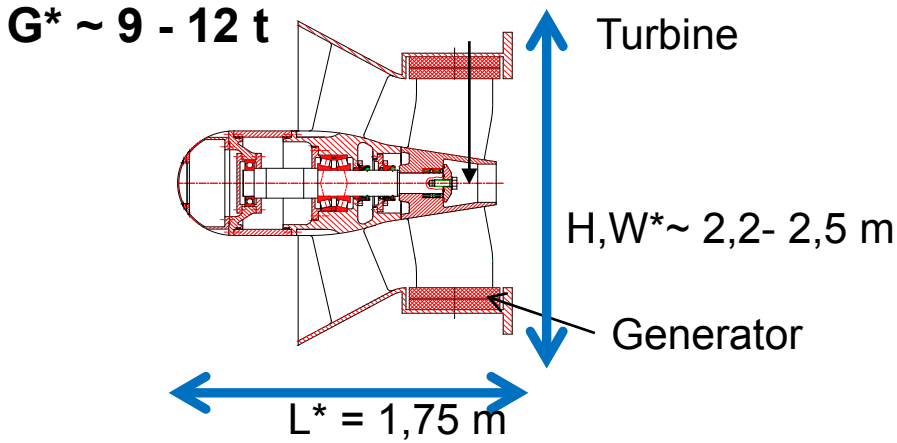

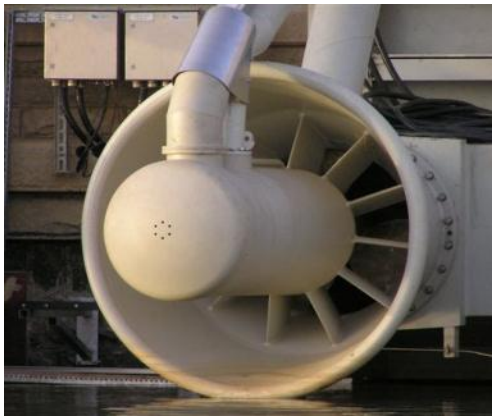

*) Approximate weights and dimensions depend on individual plant configuration

ANDRITZ Hydro

HYDROMATRIX®

Type design range of a single turbine-generator unit

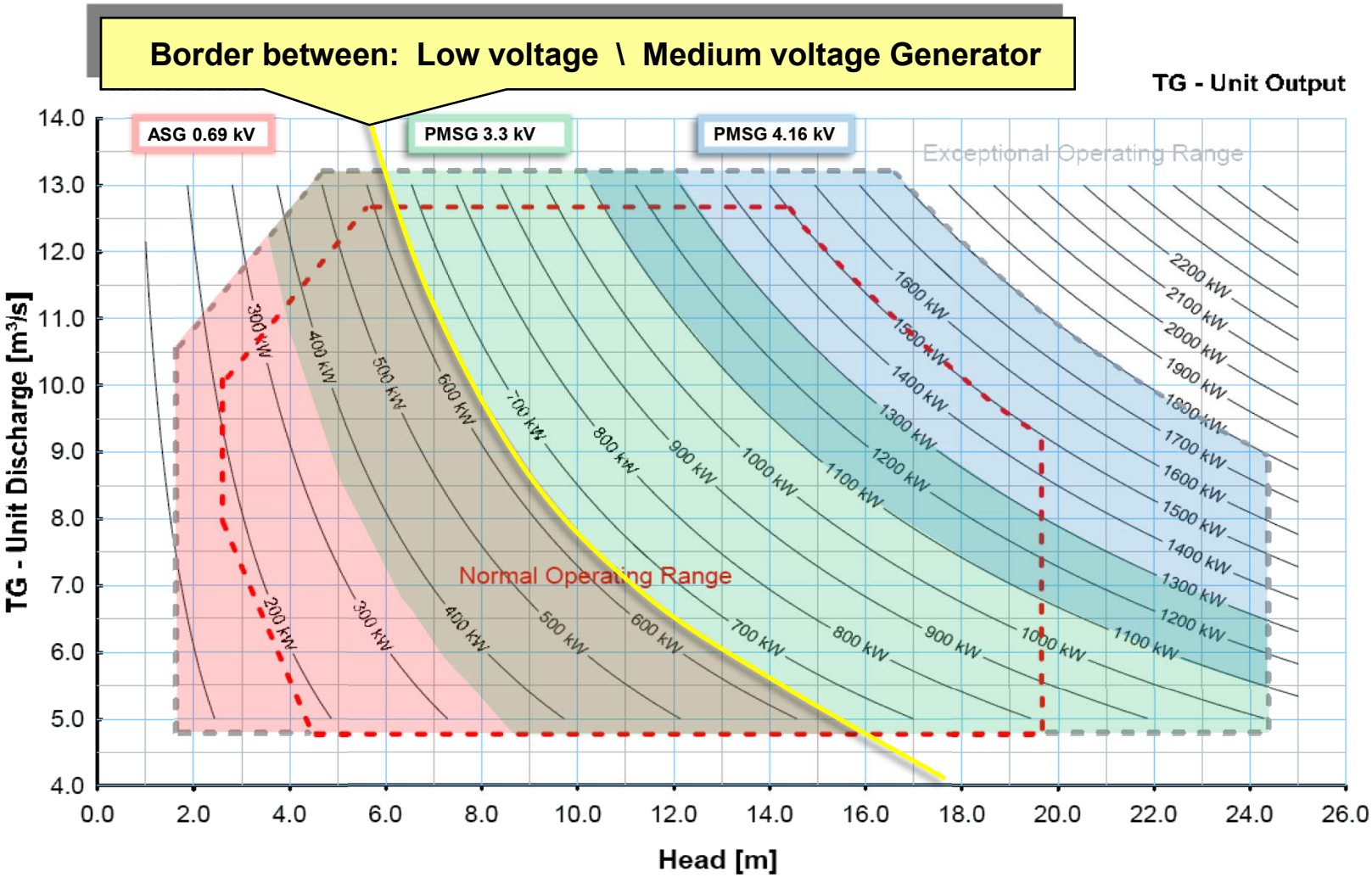

HYDROMATRIX®

Synchronization and Operation of a Turbine-Generator Unit

- **Initial state**
  - Closed drafttube gate
  - TG-unit ready for start-up
- **Starting sequence**
  - Partial opening of drafttube gate
  - TG-Unit reaches nominal speed
  - Synchronization and grid connection
- **Normal operation**
  - Drafttube gate is fully opened
  - Power rise up to steady state
- **Shut down**
  - Closing of drafttube gate
  - Unit disconnected from grid at zero power

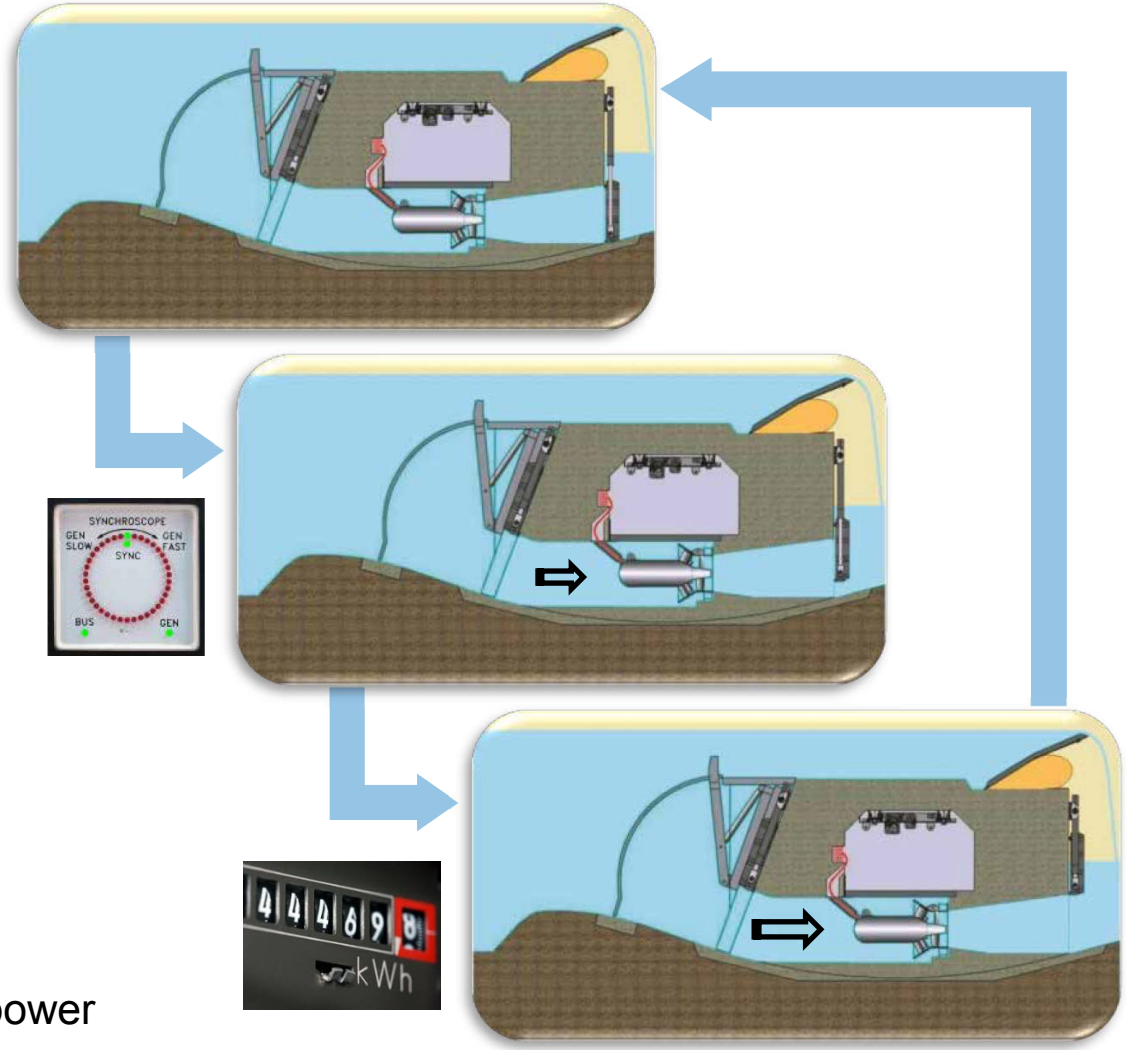

ANDRITZ Hydro

HYDROMATRIX®

Modular Design of Electrical Power Systems

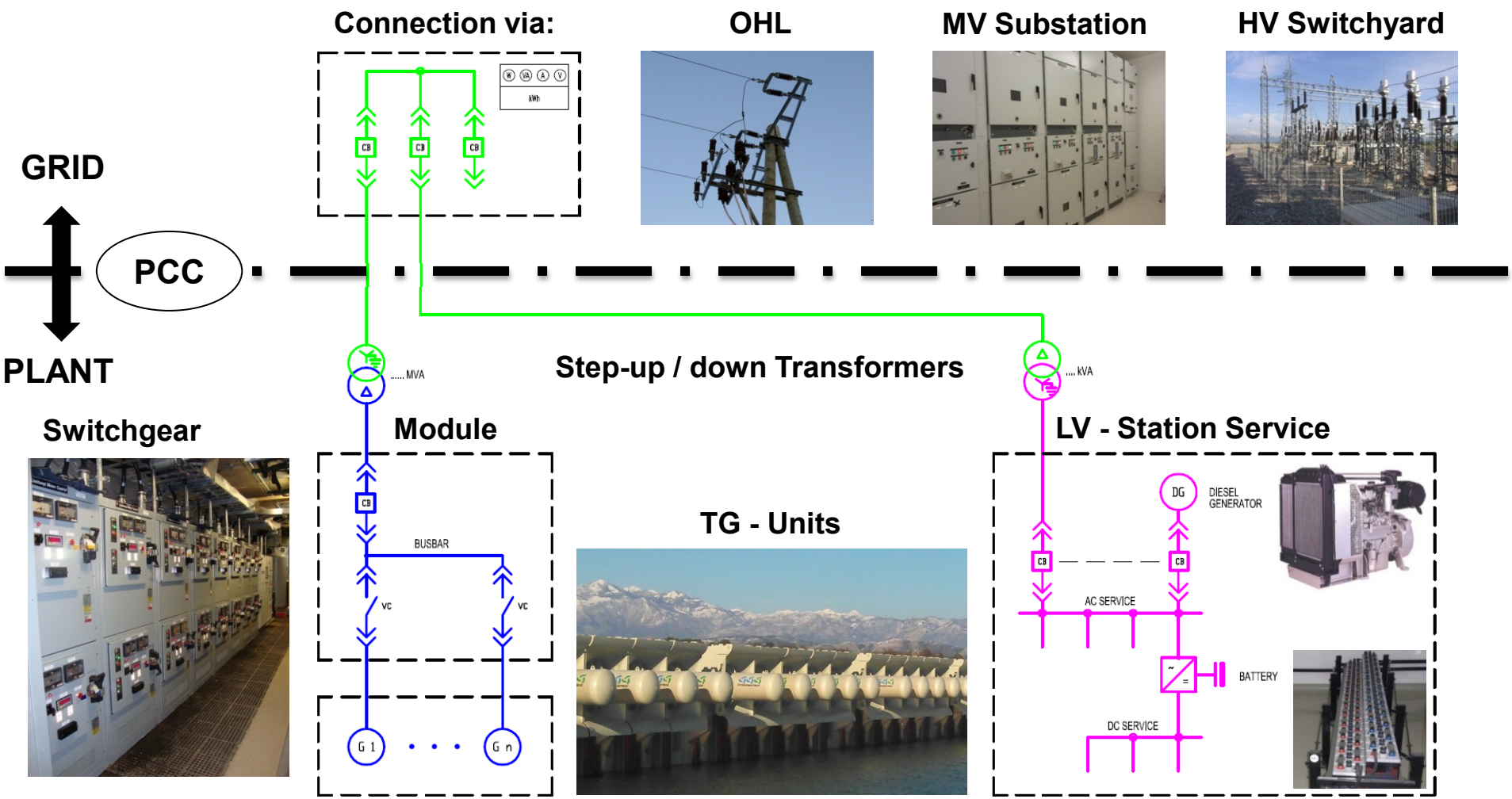

ANDRITZ Hydro

HYDROMATRIX®

Typical Design of Protection and Automation

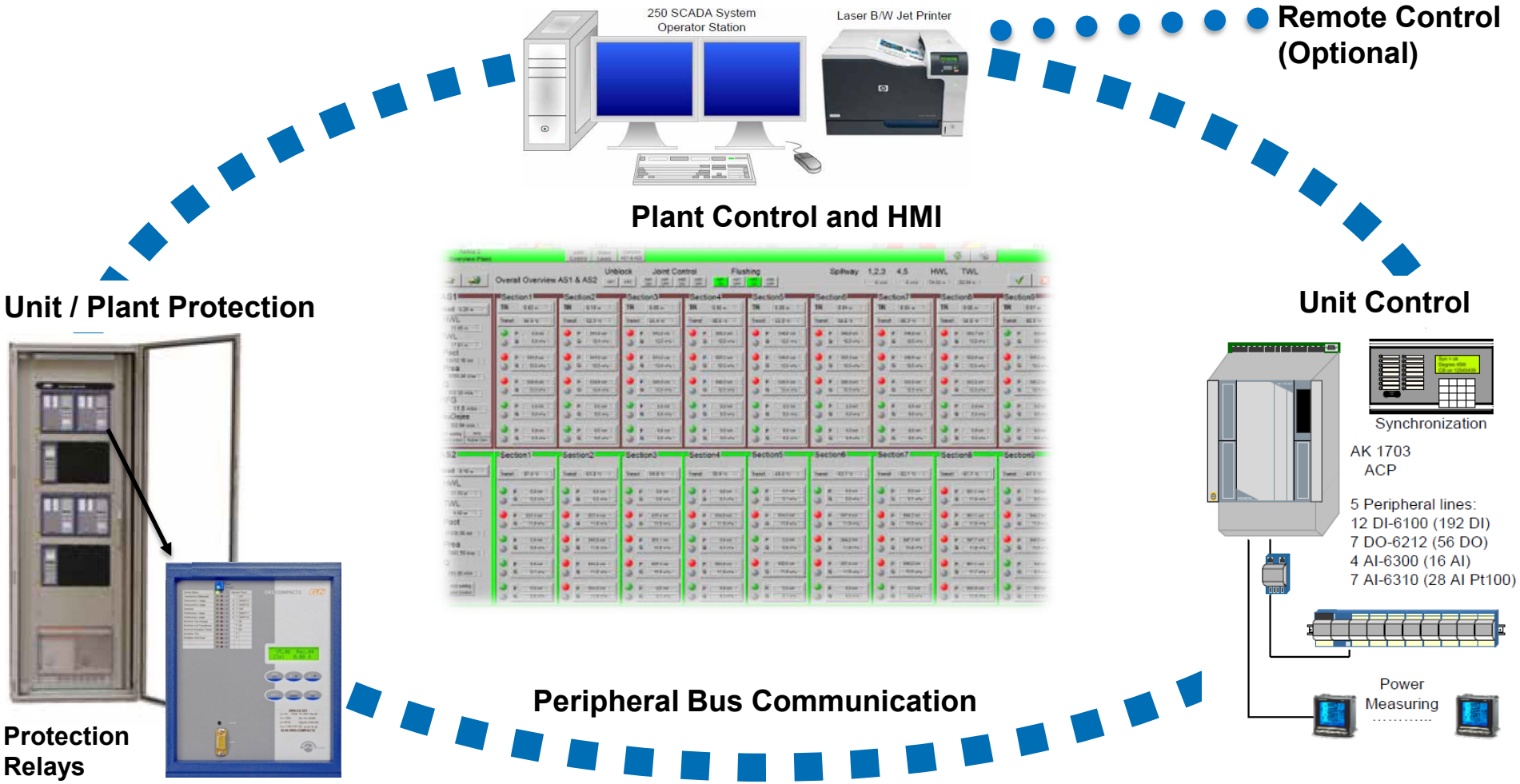

ANDRITZ Hydro

HYDROMATRIX®

Potential Applications

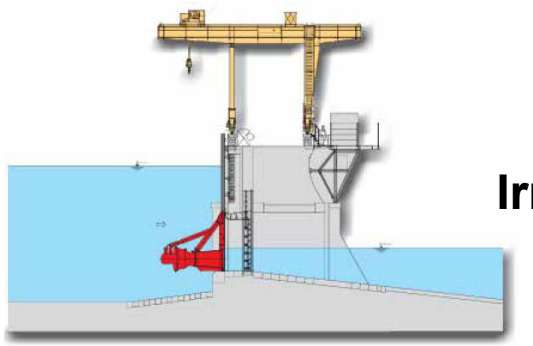

Irrigation Dams

Navigation Dams

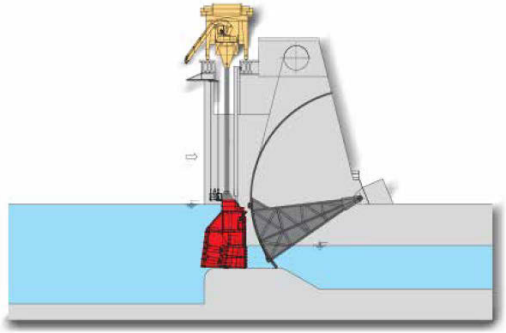

Intake Towers

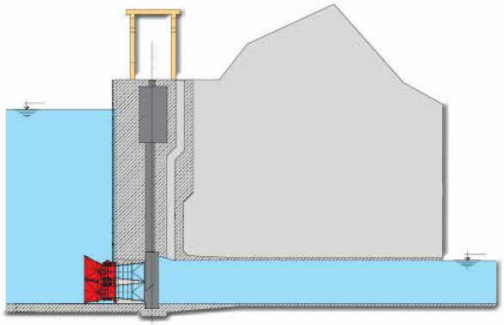

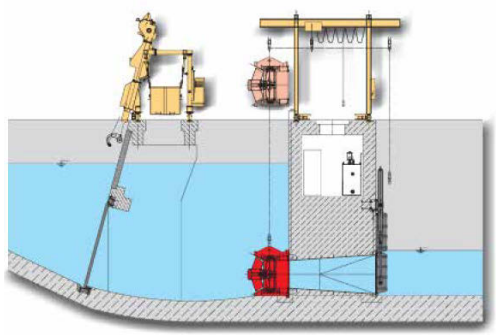

Canals and Abandoned Shiplocks

Application: Irrigation Dams

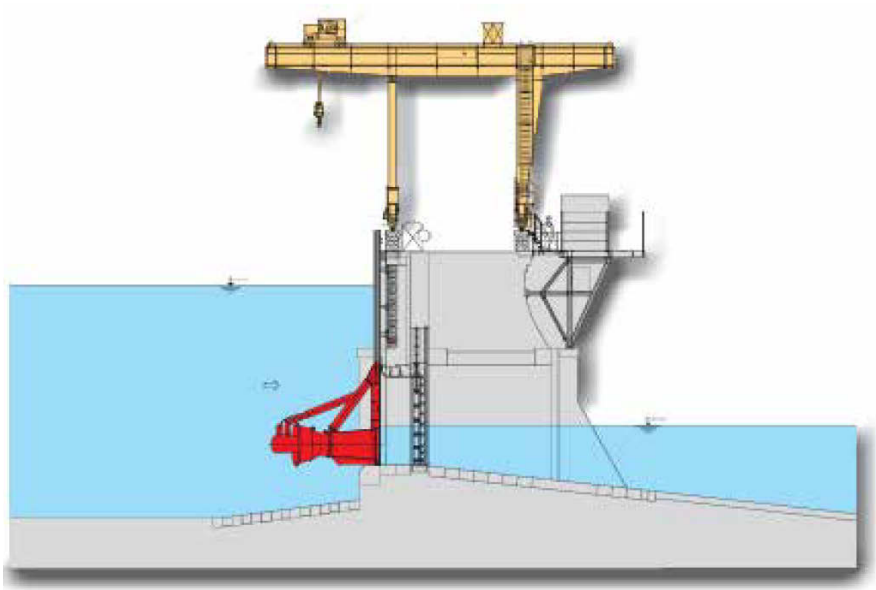

HYDROMATRIX® Experience

Irrigation Dams – JEBEL AULIA /Sudan

Client: National Electricity Corp.

D = 1,120 mm

n = 375 rpm

H = 5.5 m

P_{tu} = 380 kW

80 Hydromatrix® units in 40 modules

P_{total} = 30.4 MW

Existing barrage on the White Nile

Contract award: 2000

Commissioning: 2004

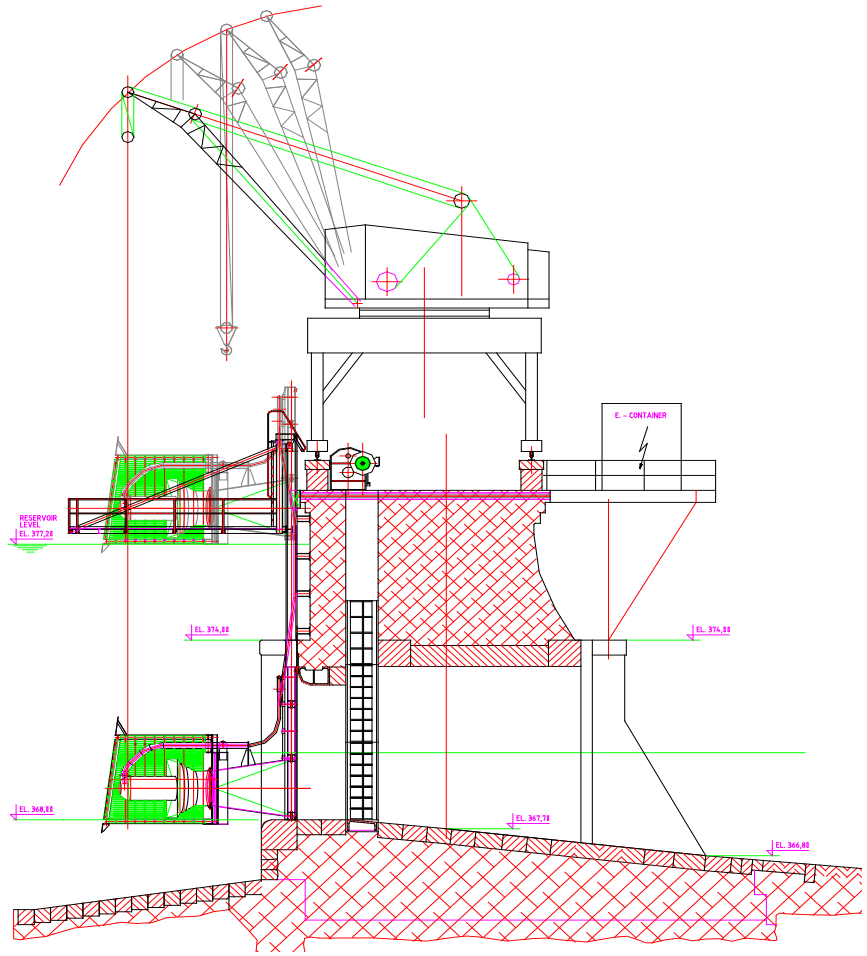

ANDRITZ Hydro

HYDROMATRIX® Experience

Irrigation Dams – JEBEL AULIA /Sudan

Jebel Aulia HYDROMATRIX® power plant, upstream view

HYDROMATRIX® Experience

Irrigation Dams – JEBEL AULIA /Sudan

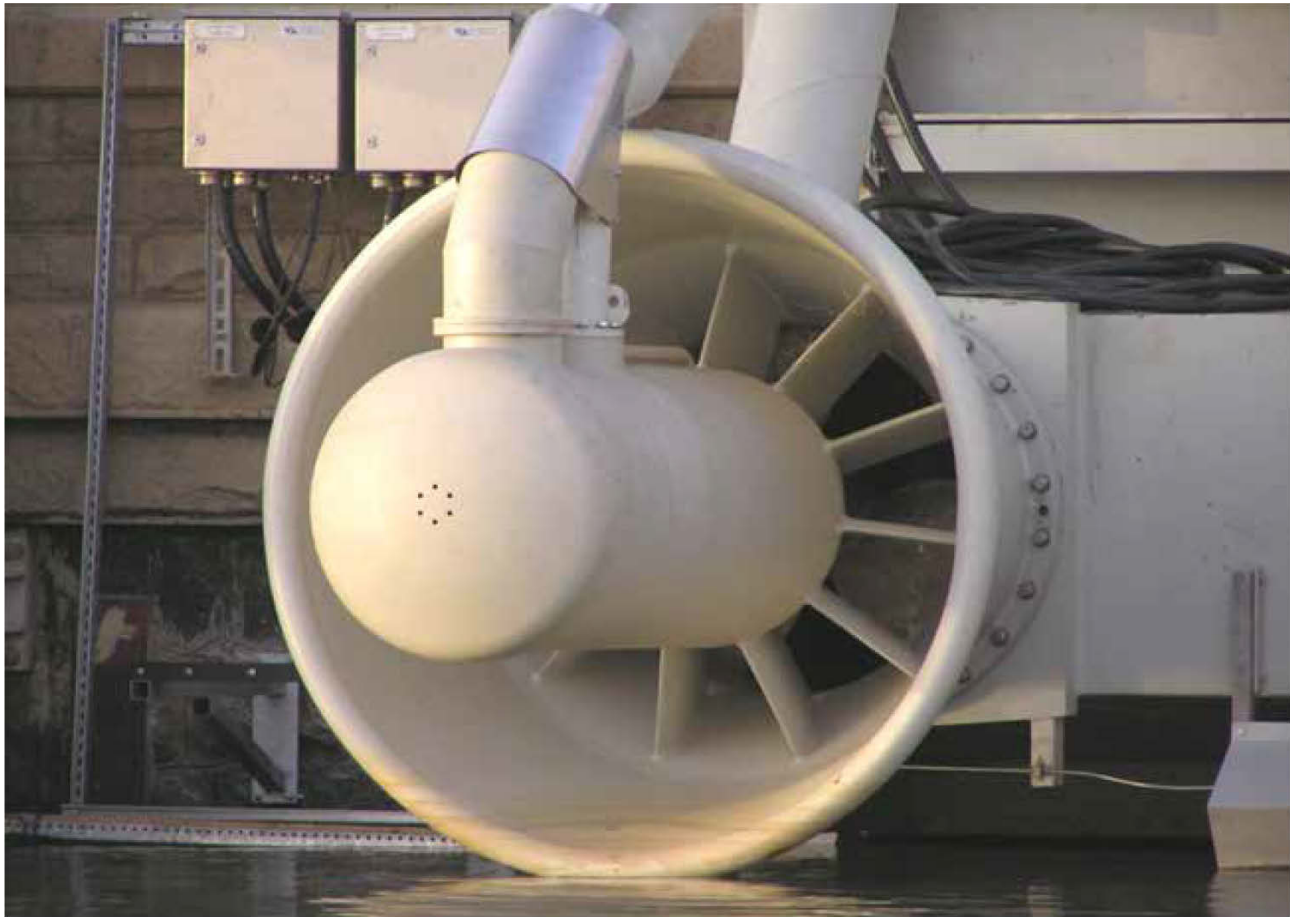

HYDROMATRIX® Turbine-Generator Unit in lifted position

HYDROMATRIX® Experience

Irrigation Dams – JEBEL AULIA /Sudan

Switchgear containers & step-up transformer-downstream side of dam

HYDROMATRIX® Experience

Irrigation Dams – JEBEL AULIA /Sudan

StrafloMatrix™ Experience

AGONITZ / Austria

Client: Energie AG

D = 1,120 mm

n = 428.6 rpm

H = 8.5 m

P_{tu} = 700 kW

1 unit

Contract award: 2002

Commissioning: 2003

StrafloMatrix™ Experience

AGONITZ / Austria

Installation of the first permanent StrafloMatrix™ unit in March 2004

HYDROMATRIX® Experience

NUSSDORF/ Austria

Client: AHP / EVN / Wienstrom

After Commissioning in June 2005

HYDROMATRIX® Experience

NUSSDORF/ Austria

Client: AHP / EVN / Wienstrom

D = 1,320 mm

n = 336.7 rpm

H = 5.86 m

P_{tu} = 545 kW

12 single units

P_{total} = 4.5 MW

Contract award: 2004

Commissioning: 2005

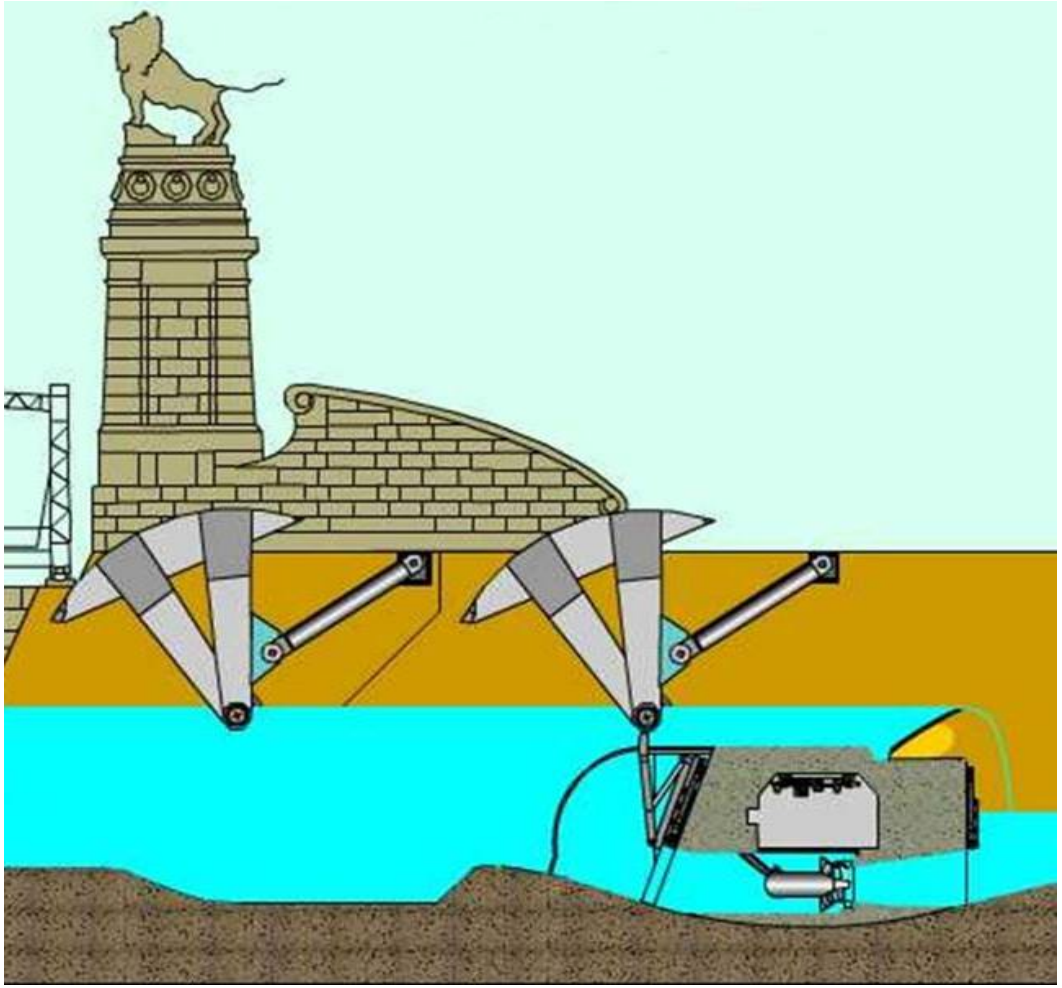

ANDRITZ Hydro

HYDROMATRIX® Experience

NUSSDORF/ Austria

Plant Concept

- Overflown weir
- Intake trash rack with cleaning machine
- Intake- and draft tube gates
- Drainable turbine chamber with draft tube
- US-gallery for cables, HPU and unit maintenance

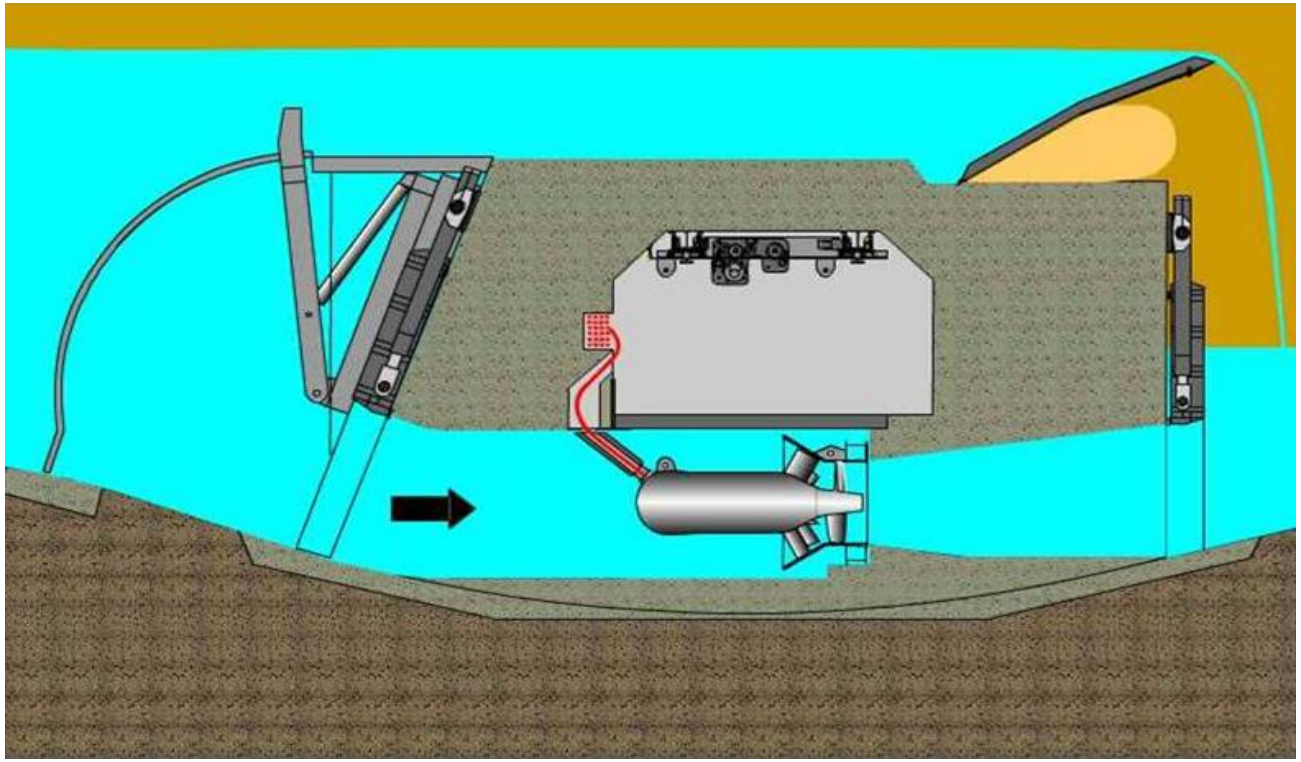

HYDROMATRIX® Experience

NUSSDORF/ Austria

Construction Phase

ANDRITZ Hydro

Application: Intake Towers

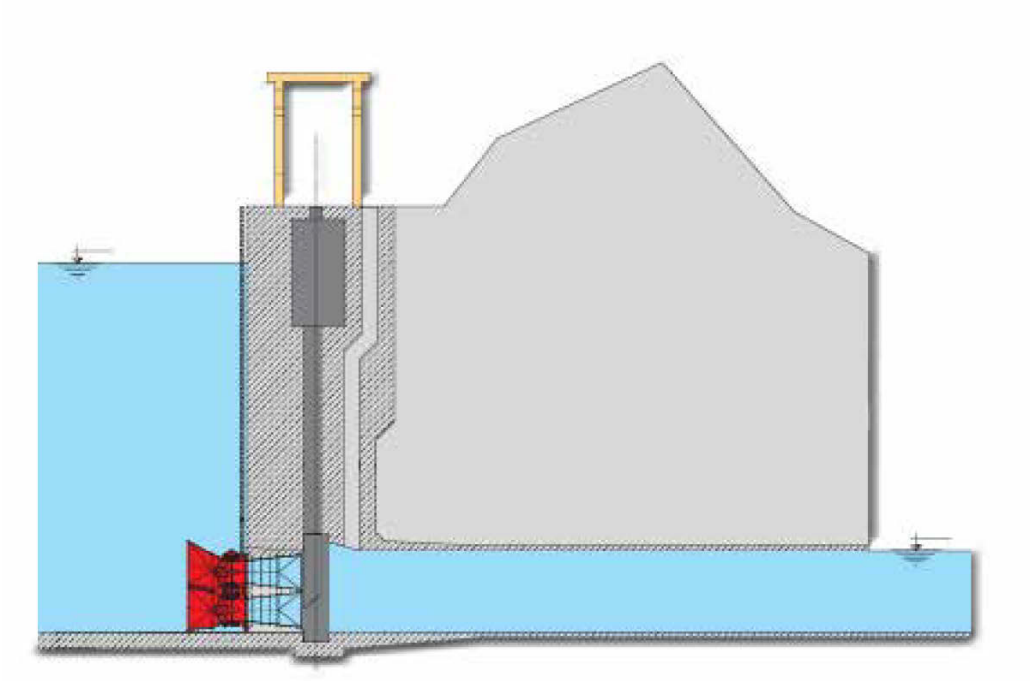

HYDROMATRIX® Experience

Intake Tower – COLEBROOK / USA

Client: Metro Hartford

D = 660 mm

n = 900 rpm

H = 8 - 35 m

P_{tu} = 500 kW

6 units in 2 modules*)

P_{total} = 3 MW

Contract award: 1987

Commissioning: 1988

*) Design by Obermeyer Hydro Inc.

Application: Shiplocks

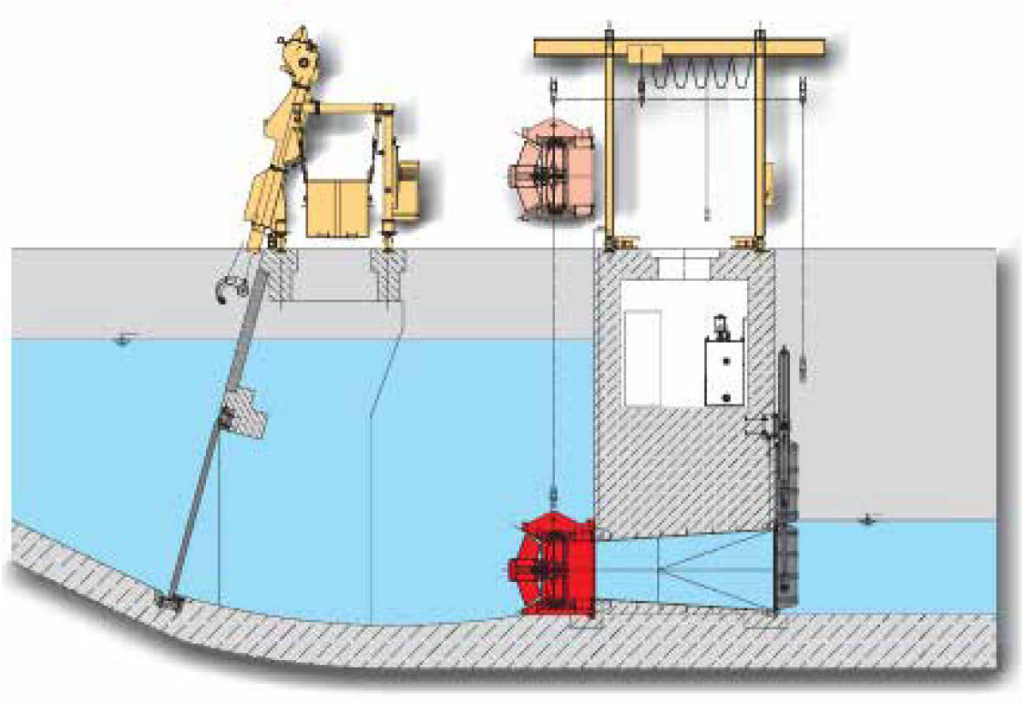

HYDROMATRIX® Experience

Sluice in Shiplocks – FREUDENAU / Austria

Client: Donaukraft

D = 910 mm

n = 500 rpm

H = 10.3 - 1.0 m

P_{tu} = 200 kW

25 units in one module

P_{total} = 5 MW

Contract award: 1997

Commissioning: 2000

CHIEVO DAM - Italy

Project Location

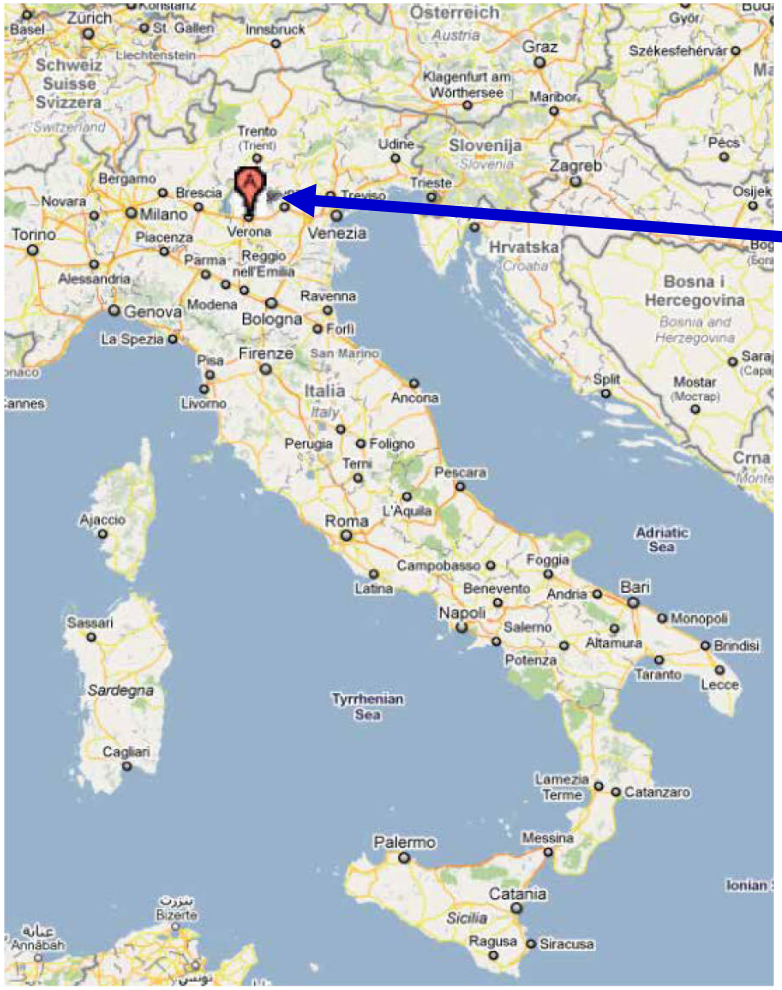

ANDRITZ Hydro

CHIEVO DAM - Italy

Design Challenges

- Use minimum river discharge for hydropower generation at existing lock & dam
- Maintain flood discharge capability through lock
- Use existing lock structure without major modifications
- Preserve architectural appearance of historic environment
- Establish possibilities for fish migration

CHIEVO DAM - Italy

Plant Layout

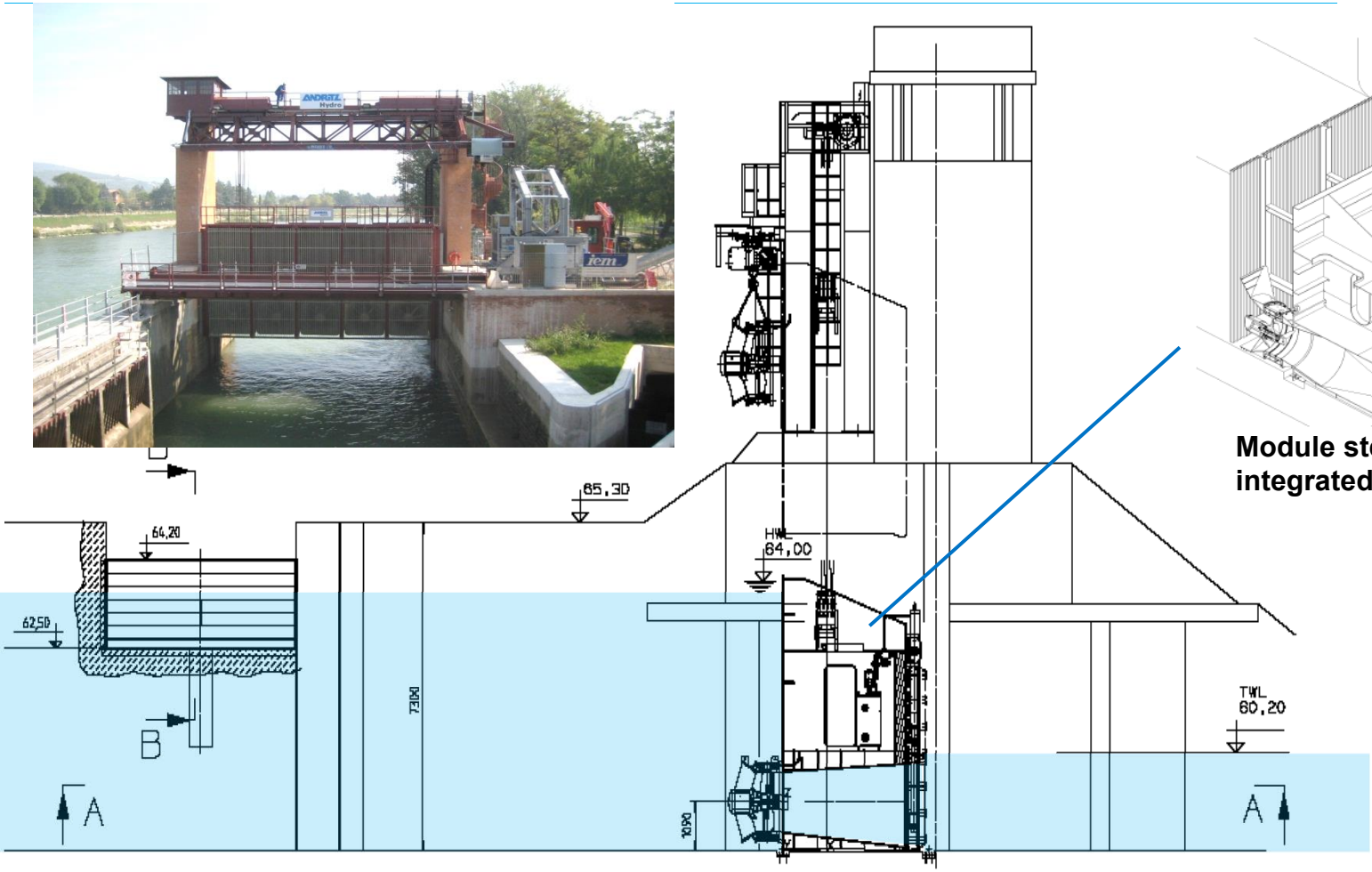

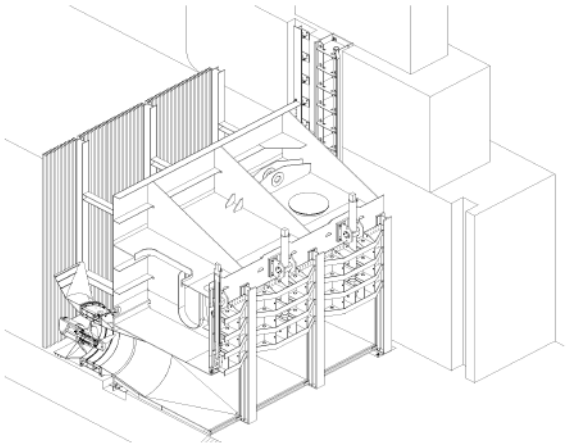

Module steel structure with integrated StrafloMatrix™ TG-units

StrafloMatrix™ Experience

CHIEVO DAM / Italy

Client: Consorzio Canale Ind. le G.Camuzzoni

Consultant: Studio Frosio

D = 1,320 mm

n = 250 rpm

H = 3.8 m

P_{tu} = 270 kW

5 units in 1 module

P_{total} = 1.35 MW

Annual Energy: 12 GWh

Project Start: 2007

Commissioning: 2009

StrafloMatrix™ plant during construction

StrafloMatrix™ plant in lifted position, upstream view

ANDRITZ Hydro

StrafloMatrix™ Experience

CHIEVO DAM / Italy

StrafloMatrix™ hydro power plant, Downstream view

The Winner of Austrian State Award for Environmental and Energy Technology 2010

LOWER ST. ANTHONY FALLS - USA

StrafloMatrix™ Power Plant

LSAF after installation of StrafloMatrix™ power plant

LSAF prior to installation of StrafloMatrix™ power plant

ANDRITZ Hydro

LOWER ST. ANTHONY FALLS - USA

Design Challenges

- Use existing lock structure without major modifications (no excavation)
- Maintain flood discharge capability through lock
  - Model test at techn. university Vienna
- Fulfill grid interconnection requirements
- No adverse effects on barge and recreational boat traffic
- Preserve architectural appearance of existing lock and dam

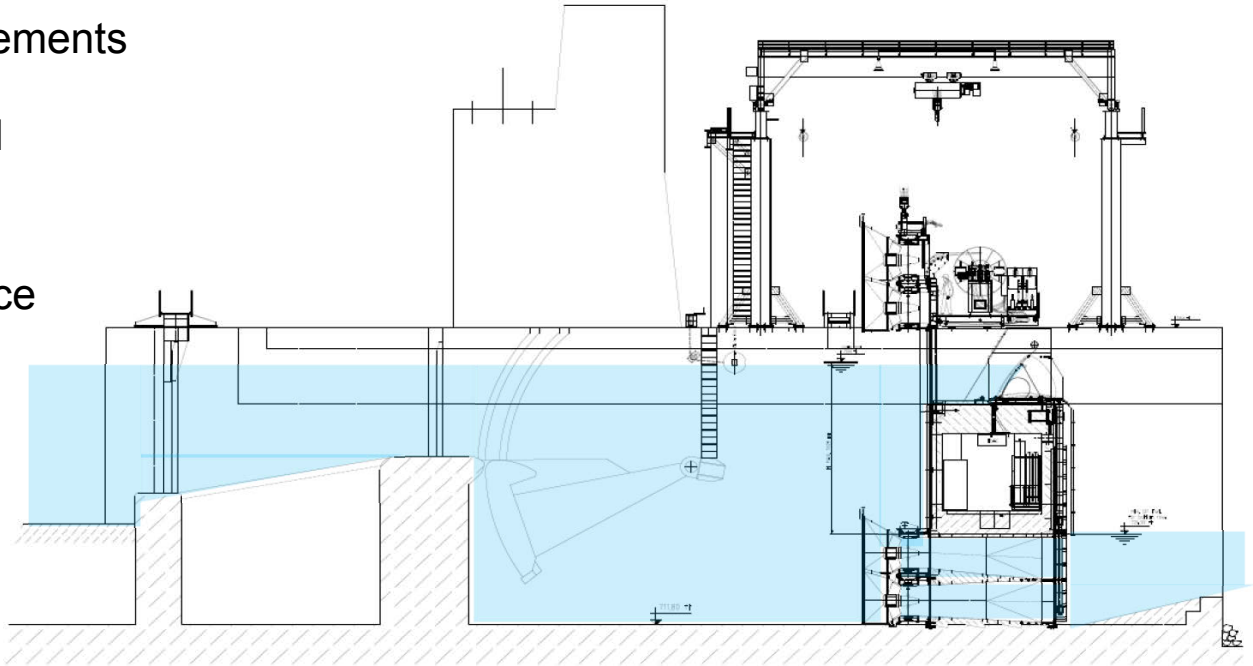

ANDRITZ Hydro

LOWER ST. ANTHONY FALLS - USA

StrafloMatrix™ Plant in Auxiliary Ship lock

Technical Data:

16 TG-units (2 rows of 8)

D = 1,320 mm

n=327.3 rpm

$H_{GR\ max}$ = 7.6 m

P_{Gen} = 625 kW

Max. Plant Capacity: 10 MW

Annual Energy: 62 GWh

Project Start: 2007

Commissioning and taking over: 2011

Output 8 % higher than guaranteed

ANDRITZ Hydro

LOWER ST. ANTHONY FALLS - USA

Site Construction and Equipment Installation

LOWER ST. ANTHONY FALLS - USA

StrafloMatrix™ Plant Features

HPU and switchgear inside underground gallery

Gantry Crane

StrafloMatrix™ TG-units in lifted position

Cable Reel

ASHTA I & II - Albania

A showcase for efficient project development

Client: VERBUND / Energji Ashta

Fast Track development

- Less than 2 years from concept to contract
- Highly experienced project owner
- Good collaboration between all stakeholders in Albania and Austria

Main selection criteria for technology

- Cost per kwh
- Shallow setting to minimize excavation and avoid geological issues
- No changes in flood planes

Investigated Technologies

- Conventional bulb versus HYDROMATRIX®
- HYDROMATRIX® was chosen -> lowest overall construction cost + all boundary conditions fulfilled

HYDROMATRIX® Experience

ASHTA I & II / Albania

Plant Layout:

- 2 HYDROMATRIX® Plants, 45 TG-Units each
- 6 km newly constructed discharge canal between ASHTA I & II
- Turn-key supply of E & M Equipment
- $P_{rated,\ total}$ = 53 MW
- Annual Energy: 242 GWh
- Project Start: Dec. 2008
- Commissioning: 2012

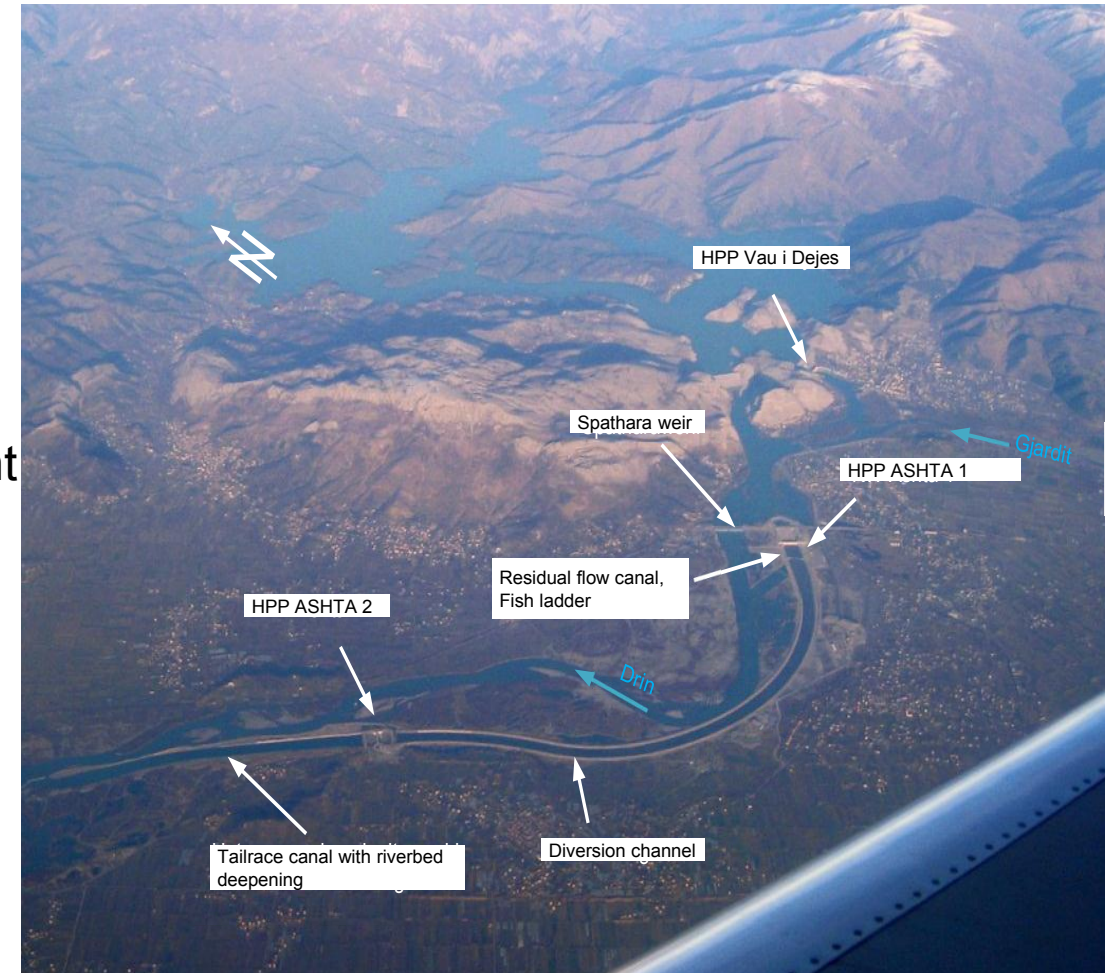

Source: © Energij Ashta - A project company of VERBUND and EVN, used by permission

ANDRITZ Hydro

ASHTA I & II - Albania

General Layout

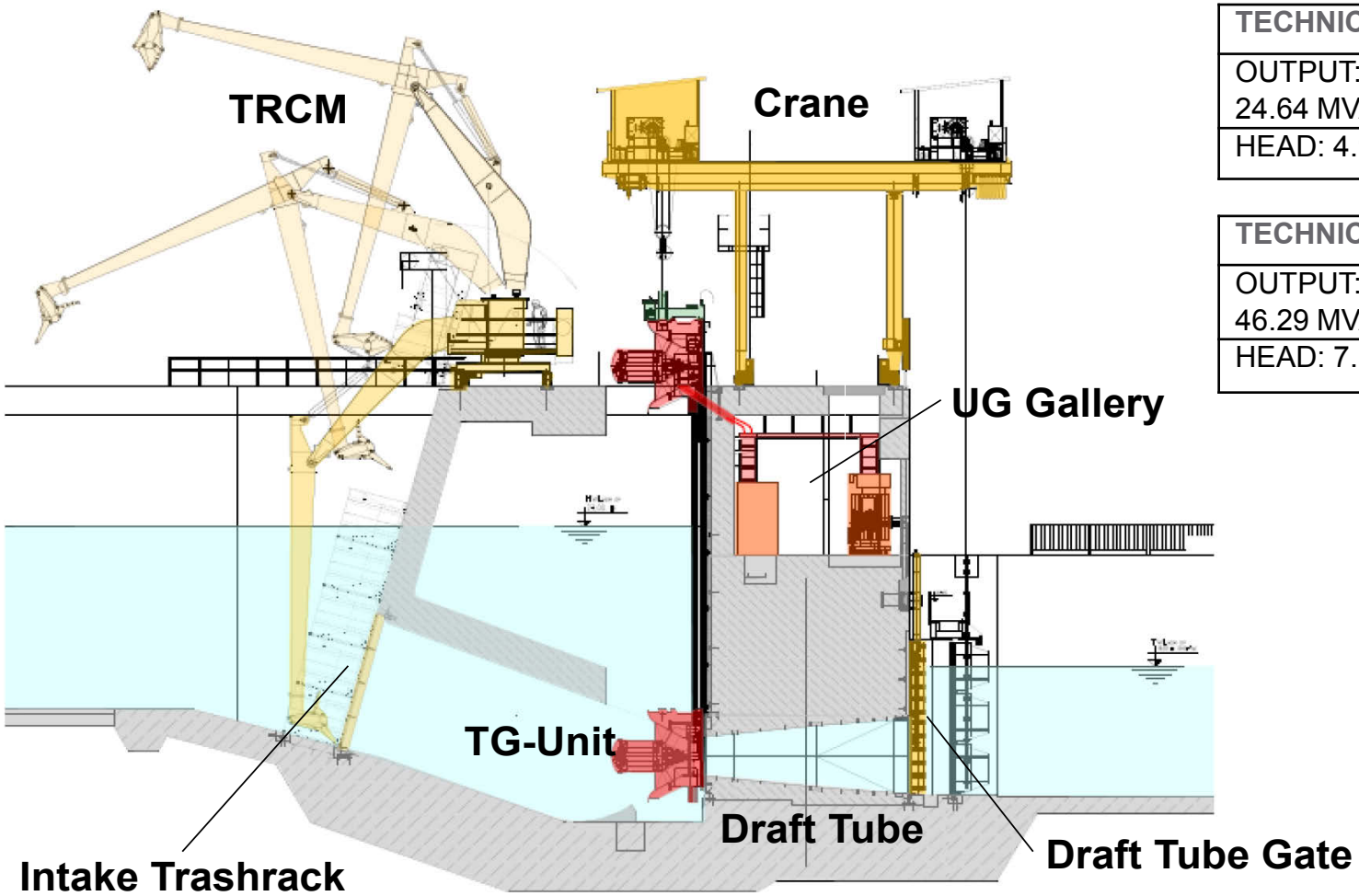

TECHNICAL DATA: ASHTA I
OUTPUT: 45 x 534 kW = 24.03 MW / 24.64 MVA
HEAD: 4.98 m

TECHNICAL DATA: ASHTA II
OUTPUT: 45 x 1,003 kW = 45.14 MW / 46.29 MVA
HEAD: 7.53 m

ANDRITZ Hydro

HYDROMATRIX® Experience

ASHTA I & II / Albania

ASHTA I draft tubes and powerhouse during construction

ASHTA I power house and crane during construction

ASHTA I turbine intake during construction -

ASHTA I

Site Construction – Status January 2012

ANDRITZ Hydro

ASHTA II

Site Construction – Status January 2012

HYDROMATRIX® TG-units

in lifted position, upstream view

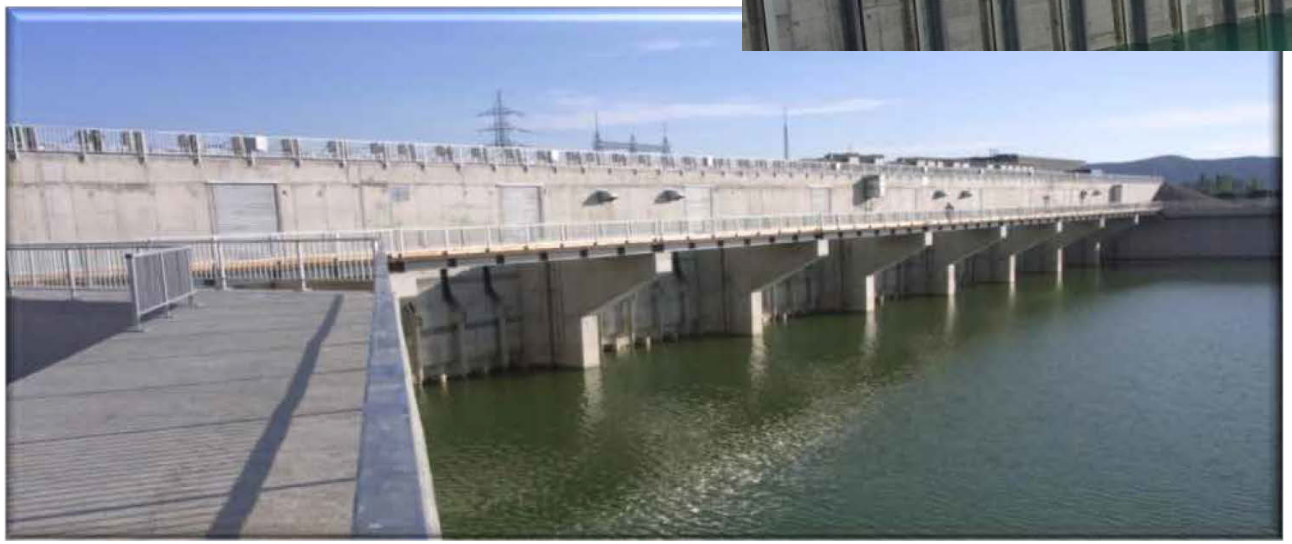

ASHTA II Power House, downstream view

HYDROMATRIX® Experience

ASHTA I & II / Albania

Ashta I intake area

HYDROMATRIX® TG-Unit

Application: Navigation Dams

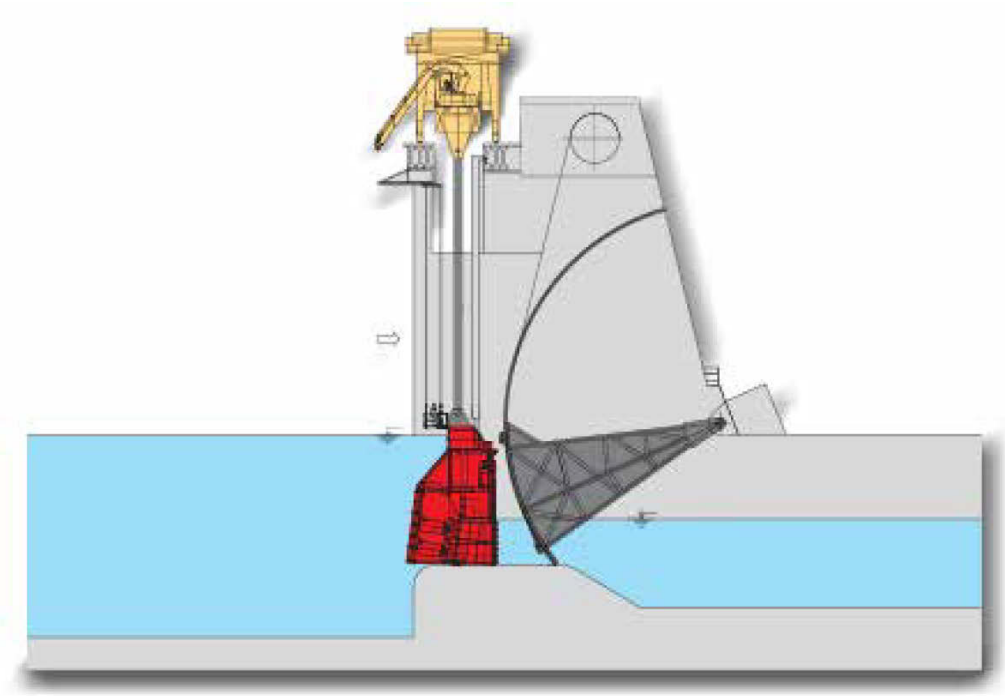

HYDROMATRIX® Concept

Navigation Dams – Ohio River

HYDROMATRIX® Concept study

Navigation Dams – Ohio River

Typical purpose of navigation dams:

- Navigation and flood control

HYDROMATRIX® concept:

- Installation of movable HYDROMATRIX® modules in existing water passage of spillways
- Flexible module design offers possibility for various plant configurations

Lock & Dam on the Ohio River

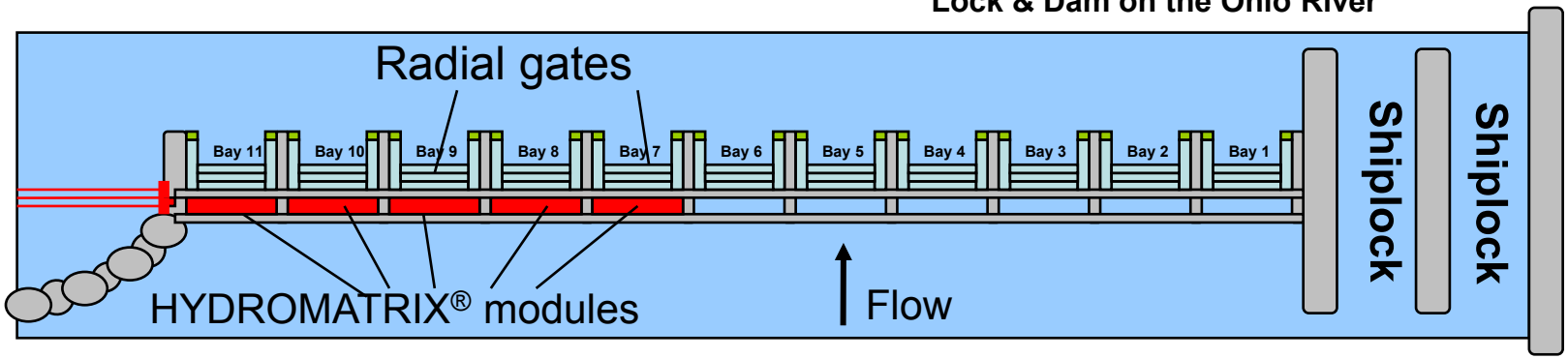

ANDRITZ Hydro

HYDROMATRIX® Concept

Navigation Dams – Ohio River

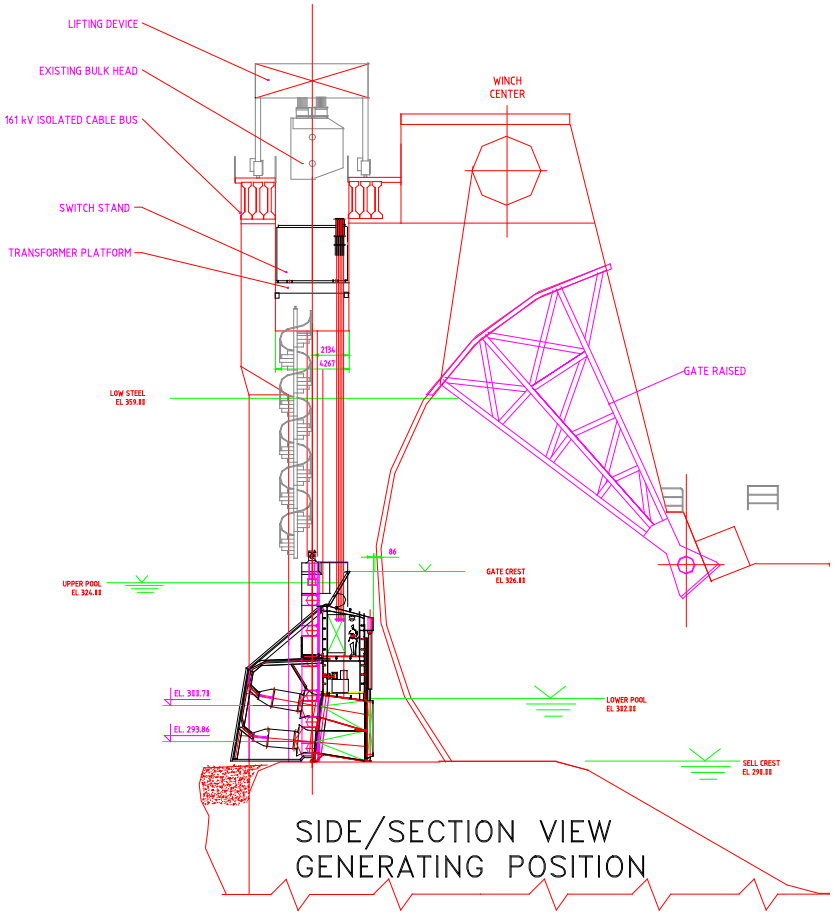

Example for design alternative: Several Power Modules installed in stoplog slots of the radial gate bays

HYDROMATRIX®: 2 x 17 units per Module

Runner Diameter:	1.25 m
Rated Net Head:	6.5 m
Rated unit Discharge:	10.6 m³/s
Rated Module Discharge:	360.4 m³/s
Rated output / TG unit:	500 kW
Total Rated Plant Output:	85 MW

ANDRITZ Hydro

HYDROMATRIX® Concept

Module Cross Section

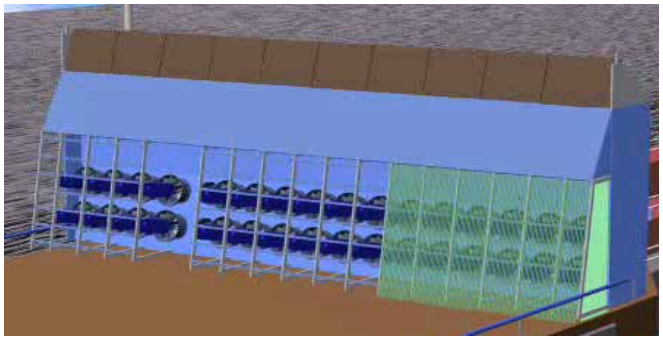

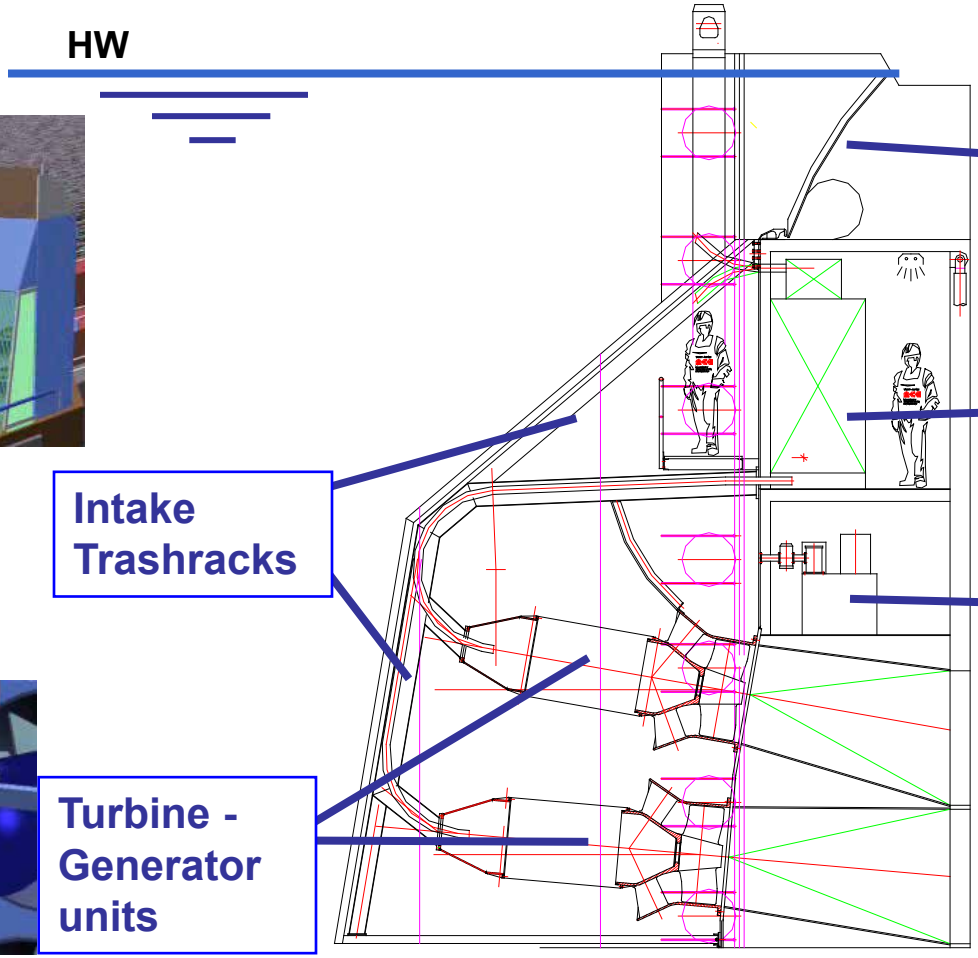

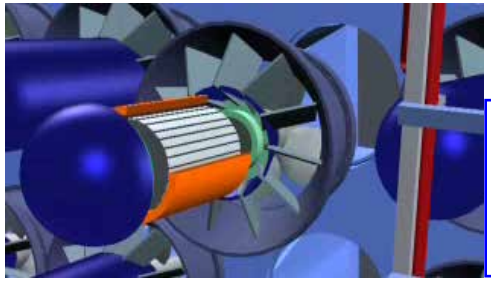

ANDRITZ Hydro

HYDROMATRIX®

Contact Worldwide

http://www.andritz.com/hy-hydromatrix

For more information about HYDROMATRIX® please contact:

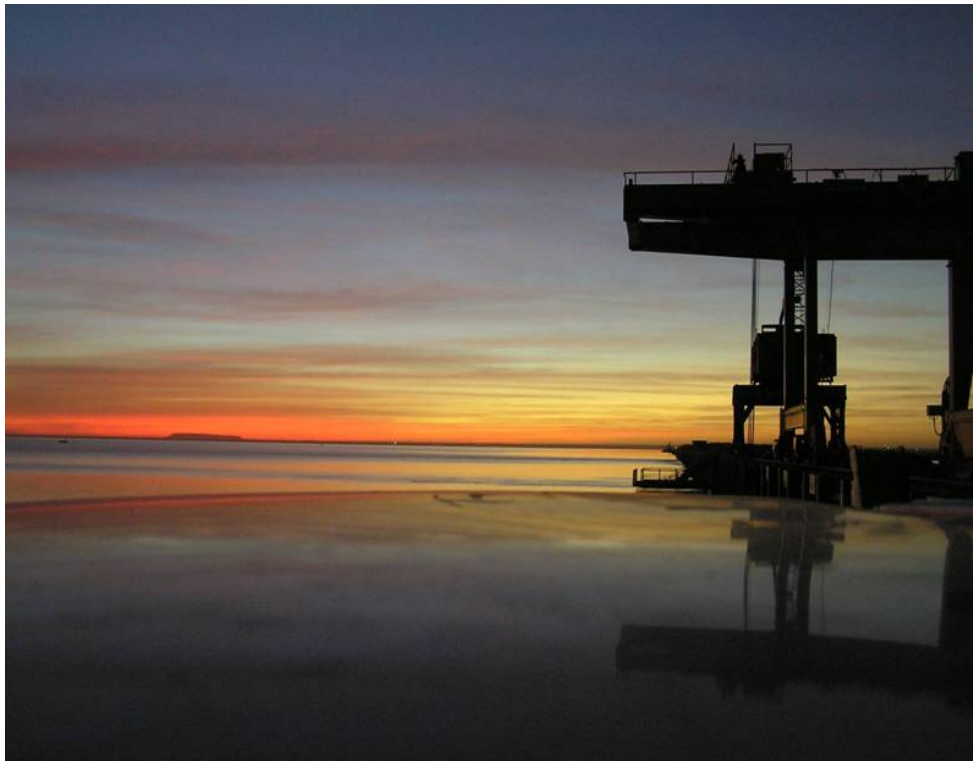

Günter Hetzmannseder

Phone: +43 (732) 6986 6429

E-mail: guenter.hetzmannseder@andritz.com

ANDRITZ HYDRO GmbH

A - 4031 Linz, Austria

Lunzerstrasse 78

Web: http://www.andritz.com