Perfecting the spunlace process:
Evolution of ANDRITZ injector technology and the development of neXjet

In the production of hydroentangled nonwovens (spunlacing), the heart of the process is the Injector. This critical component is responsible for generating the high-speed water jets which cause the actual fiber entanglement. The result of several years of refinement based on customer feedback and actual operation, the neXjet Injector from ANDRITZ Perfojet represents state-of-the-art.

Before the advent of hydroentanglement (spunlacing), nonwoven webs were mechanically bonded with needles, chemically bonded, or thermally bonded to give strength to the fiber web. Spunlacing was developed to enable nonwoven producers to create lighter weight fabrics (less than 100 gsm with fine fibers less than 3.3 dtex) using high-pressure “water needles” to bond the web of loose fibers in order to provide fabric integrity. Softness, drape, conformability, and relatively high strength are the major characteristics that have created a demand for spunlace nonwovens.

The hydroentanglement process was developed in the USA in the 1960’s. A pioneer in that field was DuPont, which decided to make its patents available in the public domain in the 1980s. Since that time, the process has been further developed to become more efficient and affordable by technology suppliers such as ANDRITZ Perfojet.

The amount of energy transferred to the web via spunlace water jets is critical to the fabric’s structure and the “completeness” of entanglement (i.e. the portion of fibers tied together). Since this energy is created, distributed, and delivered by the Injectors (Fig. 1), they are considered to be the “heart” of the spunlace process – key to product quality, productivity, and process efficiency. It is difficult to understate the importance of this component.

Fig. 1: The “heart” of the spunlace process - the Injector

The ANDRITZ Perfojet spunlacing process is based on a number of key patented components, including neXjet Injectors. Higher water pressures are the norm today so that sufficient energy can be delivered to the fiber web while requiring fewer Injectors and consuming less water. This has economic, efficiency, and maintenance advantages.

The evolution of the Injector

In the earliest days of spunlacing, the Injectors were relatively crude devices by today's standards. The first Injectors had simple water distribution (a basic manifold) which fed water to fixed coarse nozzles. The units were robust and operated at low pressures (e.g. 80 bar). Plugging of the nozzles was a common occurrence and maintenance was quite time-consuming.

When ANDRITZ Perfojet entered the hydroentanglement market in 1984, the company's focus was to improve the performance of the Injector beyond what was available in the marketplace. This focus led to a revolutionary design, which was a quantum leap for the industry: hydraulic clamping.

The part of the Injector that creates the water jets is a thin (1 mm thick) strip of stainless steel perforated with small holes (100-120 µ) down the center. The jet strip requires frequent attention to resolve issues created by plugging of the very small holes due to contaminants in the water. Tools and time were required to disassemble the Injectors on the market in order to gain access to the jet strip.

This all changed with hydraulic clamping (Fig. 2). No tools were required to access the jet strip in an ANDRITZ Perfojet Injector. By simply pressing a button, an operator or maintenance person could remove the strip for cleaning or replacement in one minute or less. Another button press and the clamped jet strip was back in its proper place for operation.

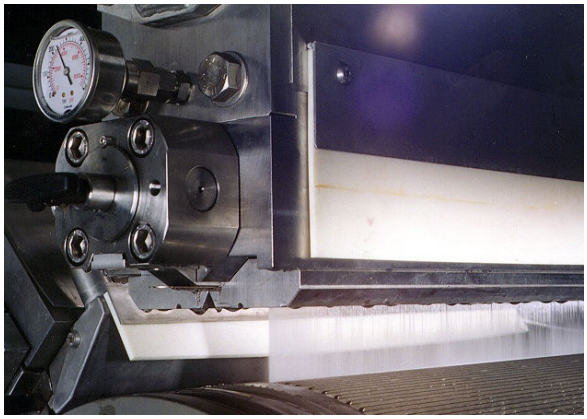

Fig. 2: ANDRITZ early injector design with hydraulic clamping

Another innovation from ANDRITZ Perfojet at that time was the concept of putting a cartridge filter (police filter) inside the Injector as a final guardian of water quality (Fig. 3). This filter is still used today – catching any contaminants in the water supply that may pass through the water management system's filters before the debris can do damage to the jet strip and/or produce a defect in the nonwoven product.

Fig. 3: Easy-to-install cartridge (police) filter

Wider, faster, and higher

The next challenge for technology suppliers was the market demand for more production. Faster and wider machines could produce the desired throughput, but this required an evolution of the Injector to achieve.

Then also there was the desire to produce heavier basis weights (e.g. artificial synthetic leathers) using the spunlace process, as well as the introduction and use of new fibers and filaments. These factors required higher pressure water jets for bonding and splitting. In the 1990's, ANDRITZ Perfojet began an R&D program to develop a higher pressure Injector unit.

The typical pressure at that time was about 150 bar, but the company was successful in developing an Injector that could achieve 1,000 bar pressure at pilot scale. Even though this high pressure was not necessary for most applications, the development work was quite valuable in helping ANDRITZ Perfojet scientists understand the benefits and obstacles associated with high-pressure applications. Various materials were analyzed (e.g. ceramics) and development work was undertaken to enhance the supporting auxiliaries to the Injector itself. An Injector capable of operating at 400 bar was developed for commercial use and this has proven to be a success.

New benchmark

The next evolution in Injector technology came around the year 2000. An experienced and proven global supplier by that time, ANDRITZ Perfojet capitalized on its experience to invent the next generation of Injectors – the neXjet Injector – as a component in the neXline spunlace production line.

The neXjet Injector created a new benchmark in performance. Until this time, all Injectors on the market used small holes to distribute water from the main manifold down to the water jet strip. The main problem with small holes is that they induce turbulences into the water flow. These turbulences have a very negative impact on the quality of the water jet flow (energy per unit area is considerably less), which is detrimental to the completeness of entanglement. Designing a new Injector to avoid turbulence and produce a needle-like stream of water has been a major technical breakthrough.

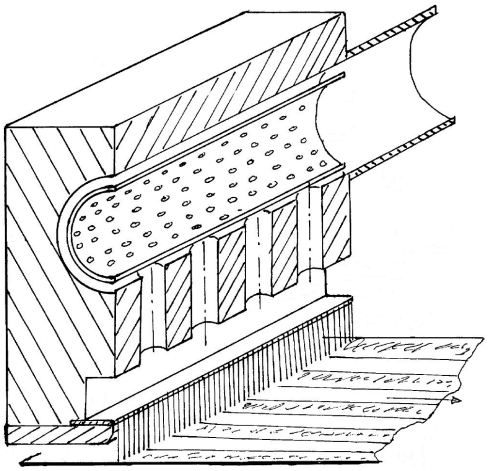

Fig. 4: Early Injector design with drilled holes

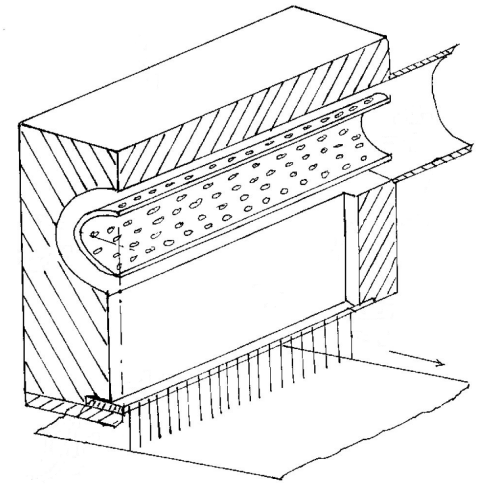

Fig. 5: neXjet Injector with Distribution Slot instead of drilled holes

Through intensive R&D work with university hydraulic specialists in France, ANDRITZ Perfojet replaced the drilled holes in the Injector manifold (Fig. 4) with a narrow Distribution Slot (Fig. 5). This innovation for the neXjet Injector is patented around the world. The slot design delivers water to the jet strip without any turbulence. The water speed vectors are perfectly aligned with the perforations in the water jet strip (Fig. 6).

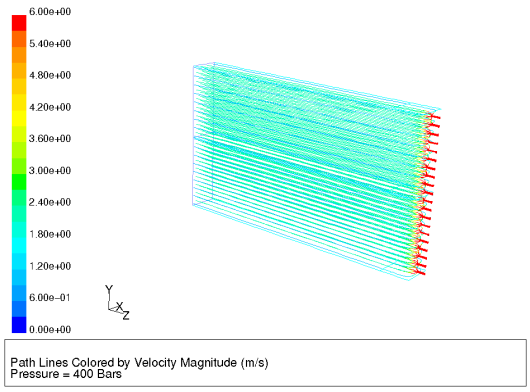

Fig. 6: The Distribution Slot can be tailored and aligned for perfect water distribution to the water jet strip

The hydraulic design of the neXjet Injector is very lean – manifold, slot, and water jet strip. There are no “dead corners” (i.e. areas inside the manifold with slower water flow) where dirt or other contaminants can accumulate. In conventional designs, the area between the distribution holes are typical places where deposits accumulate and can often be quite hard to clean.

By contrast, neXjet Injectors are typically installed on a machine for life. It is not necessary to dismantle the unit for cleaning. At the same time that the distribution slot was introduced, the hydraulic clamping system for water jet strips was replaced with an improved and simpler self-clamping design that utilizes the water pressure to obtain the necessary sealing.

By using the neXjet injectors, spunlace producers can decrease their HP pumps operating pressure by 15% that means they will save more than 20% of their hydraulic energy consumption.

No tools required

Another evolutionary improvement has been the sealing system within the Injector. With high-pressure 400 bar water striking a very thin water jet strip (the longest installed unit is 6.6 m), there is the potential for leaking. ANDRITZ Perfojet developed a mechanical seal that not only prevents leaks, but is extremely easy to clean or replace. The conventional sealing method required a maintenance person to push a 3 mm diameter nitrile gasket through a small groove the entire width of the machine. Similar to the water jet strip exchange, which does not require any tools, a maintenance person can easily remove and replace the seal without any tools.

The work is simplified to the point that operators and maintenance people do not require special skills or extra training in order to perform regular maintenance of the neXjet Injector.

Efficient water recirculation and filtration

For spunlacing, large volumes of water are required (120 m^3 per hour) and recycling is necessary. However, the water picks up bubbles, fiber bits, lubricants, and fiber finishing materials in the process. Filtering and recycling the water is a key part of the process. With its innovation of the Distribution Slot yielding a water distribution method that is virtually flawless (i.e. even distribution of water across the machine width that is free of turbulence), the latest focus of ANDRITZ Perfojet has been on optimizing the water management system to recover and clean virtually 100% of the process water.

ANDRITZ Perfojet developed its proprietary, highly efficient, and environmentally sound water recirculation and filtration system to ensure continuous production with the highest yield. One priority is to optimize the filtration for synthetic and/or natural fiber processing. The filtration process removes all particles, from the largest down to the finest, by passing the process water through the main filtration systems: flotation cell, sand filters, and bag filters.

Strip improvement

The latest development for the water jet strip inside the neXjet Injector is the new EXH design. The EXtra Hard strips employ modern durable materials and are designed using the latest computer-based fluid mechanics modeling tools. EXH strips more than double the lifetime of the previous design.

Since, as mentioned previously, the Injector is the heart of the spunlace process, it should not be a surprise that ANDRITZ Perfojet has chosen to produce the neXjet injector within its own manufacturing facility. Significant investments have been made to acquire the latest generation of specialized machine tools to ensure repeatable and accurate tolerances and perfect product quality. The facility complies with

international standards for Quality Assurance and Quality Control practices, and is certified within the strict standards of the global ANDRITZ Group for continuous quality control from material selection to actual installation.

Summary

The Injector is the heart of the hydroentanglement (spunlace) process. ANDRITZ Perfojet developed a revolutionary design Injector when it entered the hydroentanglement market many years ago and is acknowledged to have the best Injector technology in terms of water distribution and the quality of the high-pressure water jets – without pressure drops, without turbulence, and with protection of the jets via the internal guardian filter.

Five major patents protect the neXjet Injector design. Each makes a major contribution to hydraulic performance or ease of operations and maintenance:

- Slots vs. holes for water distribution without turbulence
- Easy-to-handle sealing system
- Easy-to-handle closing system

These design features and benefits, evolved over years of continuous development, have elevated the neXjet Injector to the position of having the leading technology to this day. There are about 1,000 new-generation ANDRITZ injectors installed worldwide, thus demonstrating the global leadership position of ANDRITZ Nonwoven.

Authors:
Frederic Noelle
Divisional Head of Innovation and IP
Laurent Jallat
Divisional Head of Marketing
ANDRITZ Perfojet SAS, Montbonnot Saint Martin, France